OmniPGW □□□□

OmniPGW - □□□□□□□□□□ (PGW-C)

□ Omnitouch □□□□□□

□□

1. □□
2. □□
3. □□□□
4. □□□□
5. □□□□
6. □□
7. □□□□□□ (OAM API)
8. □□□□□
9. □□□□
10. □□□□

□□

OmniPGW □□□□□□□□□□□□□□□□□□ (PGW-C) □□□□□ 3GPP LTE □□□□□ (EPC) □□□□ Omnitouch □□□□□□□□□□□□□□□□□□□□□□□□□□□□□□

- □□□□ - □□□□□□□□ UE (□□□□) □□□□
- **IP** □□□□ - □□□□□□□□□□□□□□ IP □□
- □□□□□□□□ - □ PCRF □□□□□□□□□□□□
- □□□□□□□ - □□ PGW-U (□□□□) □□□□□□□□

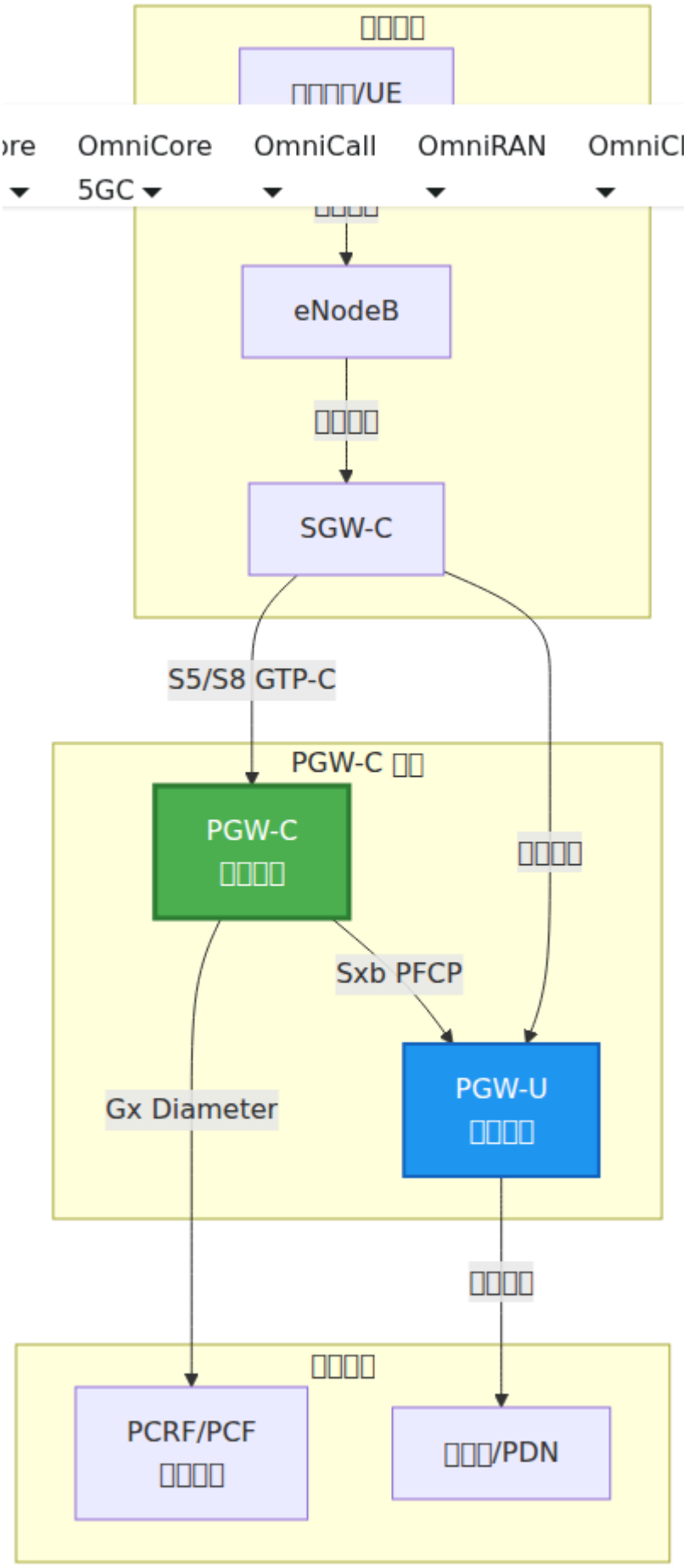
□□□□
□□□□/UE
ore
OmniCore
5GC
OmniCall
OmniRAN
OmniCl
□□□□
eNodeB
□□□□
SGW-C
S5/S8 GTP-C
PGW-C □□
PGW-C
□□□□
□□□□
Sxb PFCP
Gx Diameter
PGW-U
□□□□
□□□□
□□□□
PCRF/PCF
□□□□
□□□/PDN

PGW-C □□□

- □□□□ **SGW-C** □□□□□ □□ S5/S8 □□ (GTP-C)
- □□□□□□□□□□ **UE IP** □□
- □□ **Gx** □□ **(Diameter)** □ **PCRF** □□□□□□
- □□ **Sxb** □□ **(PFCP)** □ **PGW-U** □□□□□□□
- □□□□□□□□ **QoS** □□□□ **QoS** □□
- □□□□□□ □□□□□□□□

□□

□□□□

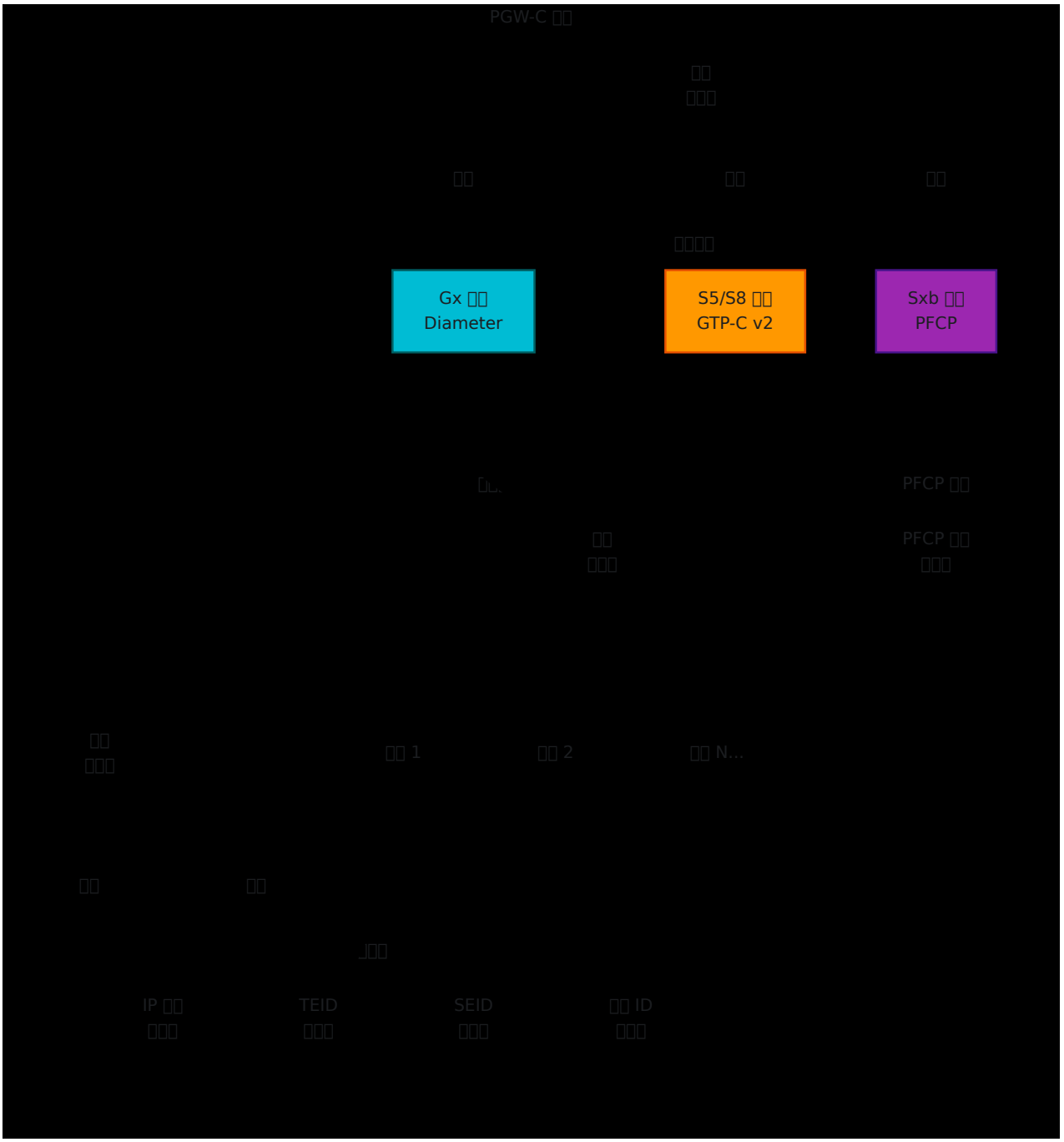

□□□□

PGW-C □□ Elixir/OTP □□□□□□□□□□□□□□□

- □□□□□ - □□□□□□□□□□□□□

- □□□□ - □□□□□□□□□
- □□□□ - □□□□ PDN □□□□ GenServer
- □□□ - □□□□□□□□ (IP□TEID□SEID □)
- **PFCP** □□□□□ - □□□ PGW-U □□□□ PFCP □□

□□

□□□□

PGW-C □□□□□□□□□ 3GPP □□□

S5/S8 □□ (GTP-C v2)

□□□ SGW-C □ PGW-C □□□□□□□□□□

□□□ □□ UDP □ GTP-C □□ 2

□□□□□

- □□□□□□□/□□
- □□□□□□□/□□
- □□□□□□□/□□
- □□□□□□□/□□

□□□ □□□ S5/S8 □□

Sxb □□ (PFCP)

□□□ PGW-C □ PGW-U □□□□□□□□□

□□□ □□ UDP □ PFCP (□□□□□□□□□□)

□□□□□

- □□□□□□□/□□
- □□□□□□□/□□

- □□□□□□□/□□
- □□□□□□□/□□
- □□□□/□□

□□□ □□□ PFCP/Sxb □□□□

Gx ���□ (Diameter)

□□□ □□□□□□□□□□ (PCRF) □□

□□□ Diameter (IETF RFC 6733)

□□□□□

- □□□□□□□□□/□□ (CCR-I/CCA-I)
- □□□□□□□□□/□□ (CCR-T/CCA-T)

□□□ □□□ Diameter Gx □□□□

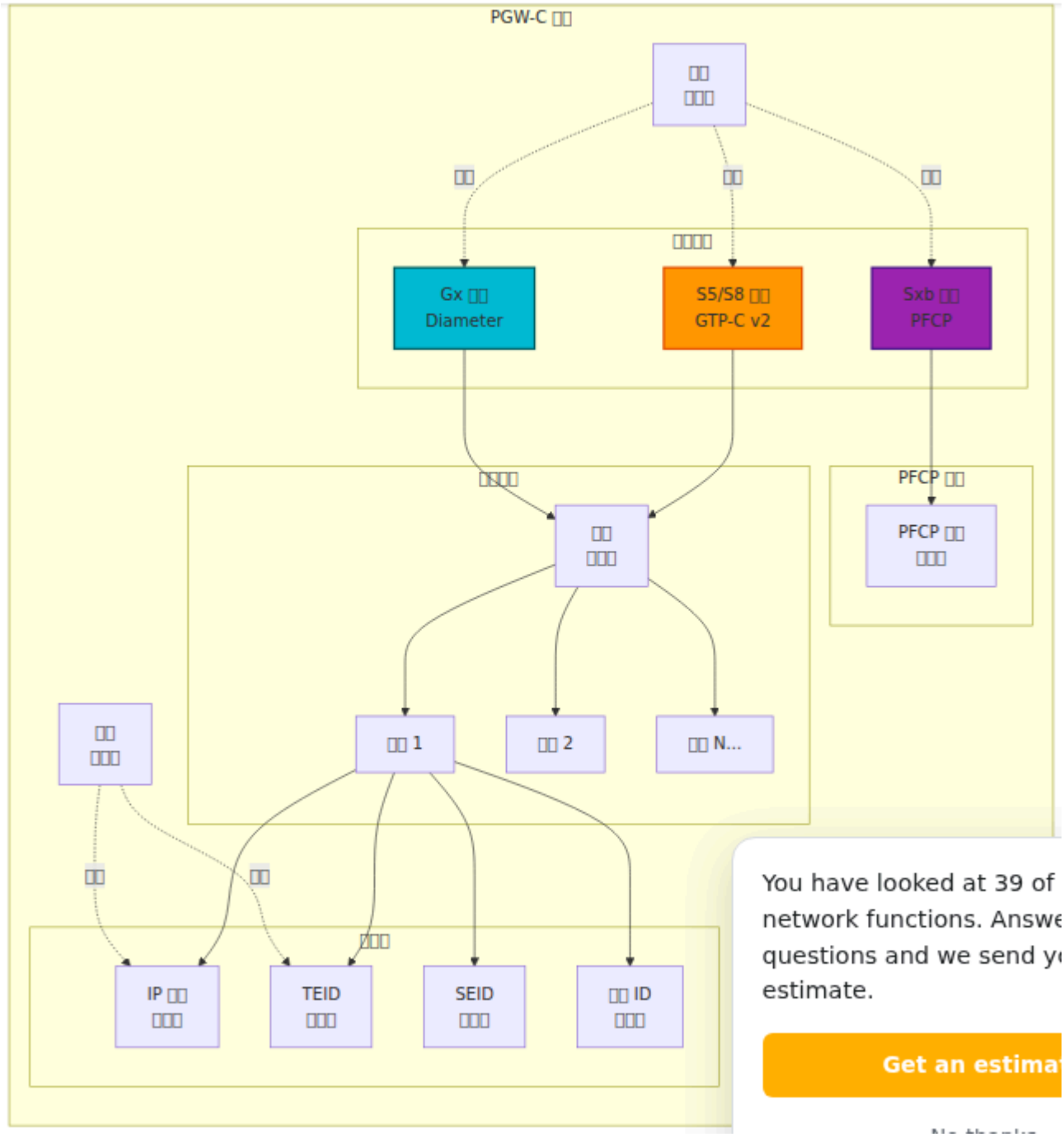

□□□□

PDN □□

PDN (□□□□□□□□) □□□□ UE □□□□□□□□□□□□□□□□□□□□□□□□□□□□□□

- **UE IP** □□ - □□□□□□□□□□□

- **APN** (□□□□□□) - □□□□□□□
- □□□□□□ - □□ QoS □□□□□□□□
- □□ **ID** - □□□□□□□□□□□□
- **TEID** (□□□□ ID) - S5/S8 □□□□□□□□
- **SEID** (□□□□ ID) - Sxb □□□□□□□□

□□□□□

□□□□□□□□□ QoS □□□□□□□□

- □□□□ - □□ PDN □□□□
- □□□□ - □□□□ QoS □□□□□□□□
- **EBI** (EPS □□ ID) - □□□□□□□□□□□
- **QoS** □□ - QCI□ARP□□□□ (MBR□GBR)

PFCP □□

PGW-C □ PGW-U □□□□□□□□□□

- **PDR** (□□□□□□□□) - □□□□□□□□/□□□
- **FAR** (□□□□□□□) - □□□□□□
- **QER** (QoS □□□□) - □□□□□□□
- **BAR** (□□□□□□□) - □□□□□□□

□□□ PFCP □□□□ □□□□□□□

IP □□□□

UE IP □□□□□□□□□□□□□□

- □□ **APN** □□□ - □□□ APN □□□□□□□□□
- □□□□ - □□□□□□□□□□ IP
- □□□□ - □□ UE □□□ IP □□
- □□□□ - □□□□□ IP □□

□□□ UE IP □□□ □□□□□□□□ IPv6 / □□ □□□ IPv6 □ IPv4v6 PDN □□□

□□□□

□□□□

- Elixir ~1.16
- Erlang/OTP 26+
- □ SGW-C□PGW-U □ PCRF □□□□□
- □ LTE EPC □□□□□

□□ OmniPGW

1. □ `config/runtime.exs` □□□□□□□□□
2. □□□□□□□□

```
mix deps.get
mix compile
```

3. □□□□□□□□

```
mix run --no-halt
```

□□□□

□□□□□□□□□□□□□□

```
[info] □□ OmniPGW...
[info] □ 127.0.0.42:42069 □□□□□□□
[info] □ 127.0.0.10 □□ S5/S8 □□
[info] □ 127.0.0.20 □□ Sxb □□
[info] □□ Gx □□
[info] □□ PFCP □□□□□
[info] OmniPGW □□□□
```

□□□□□□ `http://127.0.0.42:42069/metrics`□□□□□□□□

□□

□□□□□□□□ `config/runtime.exs` □□□□□□□□□

```
# config/runtime.exs
import Config

# □□□□
config :logger, level: :info

config :pgw_c,
  # □□ (Prometheus)
  metrics: %{
    enabled: true,
    ip_address: "10.0.0.20",  # □□□□
    port: 9090,
    registry_poll_period_ms: 5_000
  },

  # Diameter/Gx (PCRF □□)
  diameter: %{
    listen_ip: "0.0.0.0",
    host: "omnipgw.epc.mnc001.mcc001.3gppnetwork.org",
    realm: "epc.mnc001.mcc001.3gppnetwork.org",
    peer_list: [
      %{
        host: "pcrf-primary.epc.mnc001.mcc001.3gppnetwork.org",
        realm: "epc.mnc001.mcc001.3gppnetwork.org",
        ip: "10.0.1.30",
        initiate_connection: true
      },
      %{
        host: "pcrf-backup.epc.mnc001.mcc001.3gppnetwork.org",
        realm: "epc.mnc001.mcc001.3gppnetwork.org",
        ip: "10.0.2.30",
        initiate_connection: true
      }
    ]
  },

  # S5/S8 (SGW-C □□)
  s5s8: %{
    local_ipv4_address: "10.0.0.20"
  },

  # Sxb/PFCP (PGW-U □□)
  sxb: %{
```

```
    local_ip_address: "10.0.0.20"
  },

  # UPF □□
  upf_selection: %{
    rules: [
      %{
        name: "□□□□□□",
        priority: 1,
        match_field: :apn,
        match_regex: ~r/^internet/,
        upf_pool: [
          %{remote_ip_address: "10.0.0.21", remote_port: 8805,
weight: 100},
          %{remote_ip_address: "10.0.0.22", remote_port: 8805,
weight: 0}  # □□
        ]
      }
    ],
    fallback_pool: [
      %{remote_ip_address: "10.0.0.21", remote_port: 8805, weight:
100}
    ]
  },

  # UE IP □
  ue: %{
    subnet_map: %{
      "internet" => [
        "100.64.0.0/18"  # 16,382 □ IP
      ],
      "ims" => [
        "100.64.64.0/22"  # 1,022 □ IP
      ],
      "enterprise.corp" => [
        "10.100.0.0/16"  # 65,534 □ IP
      ],
      default: [
        "100.64.127.0/24"  # 254 □ IP
      ]
    }
  },

  # □□□□□□
```

```
  pco: %{
    primary_dns_server_address: "8.8.8.8",
    secondary_dns_server_address: "8.8.4.4",
    p_cscf_ipv4_address_list: ["10.0.0.50", "10.0.0.51"],
    ipv4_link_mtu_size: 1400
  }
```

□□□□□□□□□□

□□□□

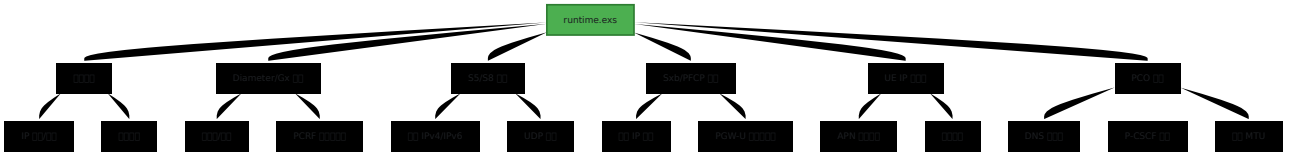

□□□□□□□

□□	□□	□□
metrics	Prometheus □□□□□□	□□□□
diameter	Gx □□□ PCRF	Diameter Gx □□
s5s8	GTP-C □□□ SGW-C	S5/S8 □□
sxb	PFCP □□□ PGW-U	PFCP □□
ue	UE IP □□□	IP □□□
pco	□□□□□□□	PCO □□
CDR	□□□□□□□□□□	CDR □□
charging	□□/□□□□□□□□□□□□	□□□□

□□□□□□□□□□ □□□□□□□□

□□□□□□□ (OAM API)

OmniPGW □□□□ **OAM REST API** □□□□□□□

□□	□□	□□ (□□□)
□□□□□□□□□ (IMSI/MSISDN/IP)	`POST /api/ue_search`	UE □□
□□/□□□□ PDN □□	`GET /api/sessions[?search=<imsi|msisdn|ip>]`	PGW □□
□ IMSI □□□□□□	`GET /api/sessions/<imsi>`	PGW □□ (□□)
□□□□/□□□□	`GET /api/session_history[?type=&search=&page=&page_size=]`	□□□□
□□□□□□	`GET /api/topology`	□□□□
UE IP □□□□□□	`GET /api/ip_pools`, `GET /api/ip_pools/<name>`	IP □
UPF / PFCP □□□□□	`GET /api/upf`, `GET /api/upf/<ip>`	PFCP □□ / UPF □□
UPF □□□□□□□□ PCO □□	`GET /api/upf_selection`	UPF □□
Diameter (Gx/Gy) □□□□□□	`GET /api/diameter[?status=connected|disconnected]`, `GET /api/diameter/<origin-host>`	Diameter □□□
□□□□□□□□□ (Gy) □□	`GET /api/charging[?search=<imsi>]`, `GET /api/charging/<imsi>`	Gy □□
□□□□□□□□□□□□□□□□□□	`PUT /api/charging/override`, `GET /api/charging/override`, `DELETE /api/charging/override`	-
P-CSCF DNS □□□□	`GET /api/pcscf_monitor`	P-CSCF □□

□□	□□	□□ (□□□)
□□□□	`GET /api/status`	-

□□

```
watch -n 2 'curl -sk https://localhost:8443/api/sessions'
watch -n 1 'curl -sk https://localhost:8443/api/diameter?
status=disconnected'
```

> □□□□□□□ □□ □□□□□□□□□□□□ **Gy** □□□ □□□□ OAM API □□□□□□□□/□□□□□□□□□□□□□□□□□□□□□□□□ `GET /api/charging` □□□□ Gy/□□□□□□□□

□□□□

□□□□□□□□□□

- □□□□□□□□□□ OmniPGW □□□□□□□□□□□
- □□□□□□□□ `watch`/cron/a □□□□□□□□□□□□□□□□□□□□□□
- □□□□□□□□□□□□□ `connected`/`associated`□□ JSON □□□□□□

□□□□□□□

- □□ `GET /api/sessions?search=...` □ IMSI□IP□MSISDN □ APN □□□□
- □□ `?status=connected|disconnected` □□ Diameter □□□
- □□ `?search=<imsi>` □□□□□□□

□□□□□□□□

- □□□□□□□ (`/api/sessions/<imsi>`□`/api/upf/<ip>`□`/api/diameter/<origin-host>`□`/api/charging/<imsi>`) □□□□□□□□□ JSON
- □□□□□□□□□□□□□□□□□□□□

□□□□□□

- □□ HTTPS/TLS □ 8443 □□□□
- □□□□□□□ IP□□□□□□□□□□□□□□□□□□□□

- □□□□ NOC/□□□□□□□□□□□

□□□□□□

□□□□□□□□□□□□□□□

```
1. □□□□□□□□□□
2. POST /api/ue_search□JSON □□□□ IMSI□MSISDN □ IP
3. □□□□□□□□□□□□□□□□□□
   a) □□□□ - □□□□□□□□□□□□□□□
   b) □□□□□□□ - □□ TAC□□□ ID□□□□□
   c) □□□□ - □□□□□□□□□□
      - QCI□MBR/GBR□□□□□□□
      - APN-AMBR □□
   d) □□□□ - Gy □□ ID□□□□□□□□ GET /api/charging/<imsi>□
   e) □□□□ - Gx □□□□□□□ PCC □□
   f) □□□□ - GET /api/session_history?search=<imsi>
4. □□□□□□□ → GET /api/diameter?status=disconnected □□ PCRF □□□
```

□□□□□□□

```
1. □□□□□□□
2. GET /api/sessions?search=<imsi|msisdn> (□ GET
/api/sessions/<imsi>)
3. □□□□□□□□□□□□□□□□□□
   - □□□ UE IP □□
   - QoS □□
   - □□□□□□□
4. □□□□□□□ → POST /api/ue_search
```

□□□□□□□

```
1. GET /api/upf              → □□□□ PGW-U □□□ "□□□"
2. GET /api/diameter?status=connected → □□□□ PCRF □□□ "□□□"
3. GET /api/sessions         → □□□□□□□□□□□
4. GET /api/status           → □□□□□□ ({"result":"ok"})
```

□□□□□

- □□ `GET /api/sessions` □□□□□
- □□□/□□□□□□□□
- □□□□□□□□
- □□□ APN □□□□□□ `GET /api/ip_pools` □□□□□□□□□

API □□□

□□ **OAM API** □□□

- □□□□□□□□□ (`POST /api/ue_search`)
- □□□□□□□□□□□□ (`GET /api/sessions/<imsi>`)
- □□□□□□□ (`GET /api/upf`, `GET /api/diameter`)
- □□□□□□□□□□□ (`GET /api/status`)
- □ IMSI/MSISDN/IP □□□□□□□□
- □□ QoS □□ (MBR□GBR□QCI)
- □□□□□□□□ (`GET /api/charging`)
- □□□□□□□□ (`GET /api/session_history`)
- IP □□□□□ (`GET /api/ip_pools`)
- □□□□□□□ (`GET /api/upf_selection`)

□□ **Prometheus** □□□□

- □□□
- □□□□
- □□□□
- □□□
- □□□

□□□□ □□□□□□ - OAM API □□□□□□□Prometheus □□□□□□□

□□□□

□□ OAM API□OmniPGW □□□ Prometheus □□□□□□□□□

□□□□

- □□□□
  - `teid_registry_count` - □□ S5/S8 □□
  - `seid_registry_count` - □□ PFCP □□
  - `session_id_registry_count` - □□ Gx □□
  - `address_registry_count` - □□□ UE IP □□
  - `charging_id_registry_count` - □□□□ ID
- □□□□
  - `s5s8_inbound_messages_total` - □□□□ GTP-C □□
  - `sxb_inbound_messages_total` - □□□□ PFCP □□
  - `gx_inbound_messages_total` - □□□□ Diameter □□
  - □□□□□□□□□□□
- □□□□
  - `s5s8_inbound_errors_total` - S5/S8 □□□□
  - `sxb_inbound_errors_total` - PFCP □□□□
  - `gx_inbound_errors_total` - Diameter □□
- □□□□□□□□
  - `pgw_session_create_total{result,cause,pdn_type,rat_type}` - PDN □□□□□□□□□□□`success`/`failure`□□□□□ GTP □□□PDN □□□`ipv4`/`ipv6`/`ipv4v6`□□ RAT □□□□□□
  - `pgw_session_delete_total{pdn_type}` - □ PDN □□□ PDN □□□□
  - `pgw_session_modify_total` - □□□□□□□□□
- **UE IP** □□□
  - `ue_pool_addresses_allocated{pool,ip_version}` - □□□□APN □□□□ IP □□□□ UE □□
  - `ue_pool_addresses_total{pool,ip_version}` - □□□□□
  - `ue_pool_addresses_utilization_ratio{pool,ip_version}` - □□□□□□0.0-1.0□□□□□□□□□□□□□□□□□□□□□□□□□□□□□□□□□□□

  - `ue_ip_allocation_failures_total{ip_version,reason}` - □□□□

□□□□

```
OmniPGW □□
├── OPERATIONS.md (□□□)
│
└── docs/
    ├── □□□□□□
    │   ├── configuration.md          ��□□ runtime.exs □□
    │   ├── ue-ip-allocation.md       IP □□□
    │   └── pco-configuration.md      DNS□P-CSCF□MTU □□
    │
    ├── □□□□
    │   ├── pfcp-interface.md         Sxb/PFCP (PGW-U □□)
    │   ├── diameter-gx.md            Gx (PCRF □□)
    │   ├── diameter-gy.md            Gy/Ro (OCS □□)
    │   └── s5s8-interface.md         S5/S8 (SGW-C □□)
    │
    └── □□
        ├── session-management.md     PDN □□□□□□
        ├── charging-override.md      □□□□□□□□□□
        └── monitoring.md             Prometheus □□□□□
```

□□□□□□

□ □□

□□	□□	□□
OPERATIONS.md	□□□□□□□□□□□□	□□□□□□□

⚙ □□

□□	□□	□□
configuration.md	□□□ runtime.exs □□□□	1,600+
ue-ip-allocation.md	UE IP □□□□□□	943
ipv6-dual-stack.md	PGW-C □ UPF □□□ IPv6 / IPv4v6 PDN □□	-
pco-configuration.md	□□□□□□DNS□P-CSCF□MTU□	344

□ □□□□

□□	□□	□□
pfcp-interface.md	PFCP/Sxb □□□ PGW-U	1,355
diameter-gx.md	Diameter Gx □□□ PCRF□□□□□□	941
diameter-gy.md	Diameter Gy/Ro □□□ OCS□□□□□□	1,100+
charging-override.md	□□□□□□□ OCS □□□□□□□□□□	-
s5s8-interface.md	GTP-C S5/S8 □□□ SGW-C	456

□ □□□□□

□□	□□	□□
session-management.md	PDN □□□□□□□□□□	435
monitoring.md	Prometheus □□□Grafana □□□□□□	807
data-cdr-format.md	CDR □□□□□URR □□□□□□□□	847
qos-bearers.md	QoS □□□□□□□□□□	448
troubleshooting.md	□□□□□□□□□□□	687

□ □□□□

□□	□□	□□
pcscf-monitoring.md	P-CSCF □□□□□□□	894

□□□□

□ Mermaid □□

□□□□□□□ **Mermaid** □□ □□□□□□

- □□□
- □□□□□□□□
- □□□
- □□□□

□ □□□□

□□□□□□□

- □□□□□□□
- □□□□□□□□□□
- □□□□

□ □□□□

□□□□□□□□□□

- □□□□□□□□□□
- □□□□
- □□□□

□ □□□□

□□□□□□□□□□□□□□□□□□□□□□□□□□

□□□□

□□□□□□□□

1. OPERATIONS.md - □□□□□□□□
2. configuration.md - □□
3. monitoring.md - □□
4. session-management.md - □□□□

□□□□□□□□

1. OPERATIONS.md - □□□□□□□□□□
2. pfcp-interface.md - □□□□□□
3. diameter-gx.md - □□□□
4. diameter-gy.md - □□□□
5. s5s8-interface.md - □□□□
6. ue-ip-allocation.md - IP □□

□□□□□□□□

1. configuration.md - □□□□
2. ue-ip-allocation.md - IP □
3. pco-configuration.md - □□□□
4. monitoring.md - □□□□

□□□□

- □□□□□ 14
- □□□□ ~10,900+
- □□□□ ~265 KB
- **Mermaid** □□□ 75+
- □□□□□ 150+

□□□□□□□

□□

- □ □□/□□□□□□
- □ OTP/Elixir □□
- □ □□□□
- □ □□ GenServer □□□

□□

- □ PFCP□□□□□□□□□□□□
- □ GTP-C v2□GPRS □□□□□
- □ Diameter□RFC 6733□

3GPP □□

- □ Sxb□PGW-C ↔ PGW-U□
- □ Gx□PGW-C ↔ PCRF□
- □ Gy/Ro□PGW-C ↔ OCS□
- □ S5/S8□SGW-C ↔ PGW-C□

□□

- □ □□□□
- □ IP □□□□
- □ QoS □□
- □ □□□□
- □ □□□□□

□□□□

3GPP □□

□□	□□
TS 29.274	GTP-C v2□S5/S8 □□□
TS 29.244	PFCP□Sxb □□□
TS 29.212	Diameter Gx □□□□□□□□
TS 32.299	Diameter □□□□□Gy/Ro□
TS 32.251	□□□□□□□
TS 23.401	EPC □□

□□□□

- □□□□□ configuration.md - □□□ `config/runtime.exs` □□

□□□□□□□□□□□□□

□□□□□□□□□□□□□□□□□□□□□□□□□□□□□□□Gy/OCS□□□□□□□□□□□□□□□□□□□OCS□□□□□□□□□□□□□OCS□□□□□□□□□□□□□□□□□□□

□□□□	���□□□□□□	□□□□□
OCS□□□□□□CCR-Initial	□□□□□□□□□□□□□□□□□□□□	□□□□□□□□□CCR-Initial□□□□□□□
OCS□□□□□□□□□□	□□□□□□□□□□□□□□□□□	□□□□□□□□□□□□□□□□
OCS□□□□□□□□□	□□□□□□□□□□□□	□□□□CCR-Update□□□□□□□□□□□□□□

□□□□□□□□□□□□□□□□□□□

□□□

□□□□□□□□PGW-C□□□□□□□□□□□□□□□□`charging.online: :off`□□□□□□PGW-C□□□ CCR-Initial□□□□□□□□□□□□□□□□

□□□□□□□□□□PCRF□□□`Online`□□□□Gx CCA□□□□□□□□□□□□□□□□

□□□□

□□□PGW-C□□□□□□□□□□□□□□□□□□□

API□□

□□□□□□□□□□□□□□□□□□□□□□□override□□□□□□□□IMSI□□□□□□□□□□

□□□□□□□OAM API□/api□□□□□□□□□□□□□□□□□□□

```
{
  "online_charging": "off",
  "override": {
    "active": true,
    "reason": "OCS incident INC-1234",
    "actor": "noc@example.com",
    "ttl_seconds": 3600,
    "remaining_seconds": 3599,
    "activated_at": "2026-09-15T04:10:22.481Z",
    "expires_at": "2026-09-15T05:10:22.481Z",
    "send_ccr_t": false,
    "max_ttl_seconds": 86400
  },
  "relief": {
    "sessions_swept": 1842,
    "walled_gardens_released": 37,
    "bearers_ungated": 5,
    "failed": 0,
    "changed": [
      { "imsi": "313380000003530", "apn": "internet", "actions":
["walled_garden_released"] }
    ]
  }
}
```

□□	□□
`online_charging`	□□□□□□□`off`□□□`on`□
`override.active`	□□□□□□□□□TTL□□□□`true`□
`override.remaining_seconds`	□□□□□□□□□□□□□□□`null`□
`relief.sessions_swept`	PGW-C□□□□□□□□□□□□□□□□□
`relief.walled_gardens_released`	□□□□□□□□□□□
`relief.bearers_ungated`	□□□□□□□□□□□
`relief.failed`	□□□□□□□□□□□□□□□□□
`relief.changed`	□□□□□□□□□□□□□□□□□□□□

□`ttl_seconds`□□□□□□□□□□□□□□□□□`reason`□□□□□□□PGW-C□□`400 Bad Request`□□□□□

□□□

```
GET /api/charging/override
```

□□□□□□□□□□`online_charging`□`override`□□`remaining_seconds`□□□□□□□□□□□□□`relief`□□□

□□□`GET /api/charging`□□□□□□□□□□□□□□□□□□□□□□□`charging_override`□

□□

```
DELETE /api/charging/override
```

□□□□□□□□

```
{ "actor": "oncall@example.com" }
```

□□□□□GET□□□□□□active□□□false□

□□□���

□OCS□□□□□□□□□□□□□

1. □□OCS□□□□□□GET /api/diameter?status=disconnected□□□Gy□□□□□□□GET /api/charging□□□□□□□□□□□
2. □□□□PGW-C□□□□□□□□□□□□□□□□□reason□□ttl_seconds□□□□□□□□□□□□□□□
3. □□□□□□relief□□□□failed□0□□□□□□□□□□□□□
4. □□□□□□PGW-C□□□□□□□2□3□
5. □□□□□□□□charging_override_active□□□□□1□
6. □□OCS□
7. □□□□□□□□DELETE /api/charging/override□□□□□
8. □□□□□□□□charging_override_active□□□□□0□□□□□□□□□□□□□CCR-Initial□

□□□□□□□□□□□□TTL□□□□□□□□PGW-C□□□□□□□□□□□□□□□□□CDR□□□□□□□□□

□□□□

□□□□□□□□□□□□□□□PGW-C□□□□□□□□□□□□□□

□□

PGW-C□□□□□□□TTL□□□□□□□□□□□□warning□□□□[CHARGING OVERRIDE]□□□□□□□□
□□□□□□□□□□□□□□□□□□warning□□□□□□□□□□□□□□

CDR□□

PGW-C□□□□□□CDR□□□□□□□□□□□□□□□□□□□□□□□□□□□□CDR□□□□□□□□□□□□□□□□□□□#□□□□CDR□□□□□□□□□□□□□□□□□□□

□□	□□	□□	□□
`charging_override_file`	□□□	□	`/var/lib/pgw_c/charging_override.jso`

□□□□

□□□□□□□□□□□□□□□□□□□□□□□□□□□□□□□□PGW-C□□□□□□□□`charging_override_file`□□□□□□□□□□□

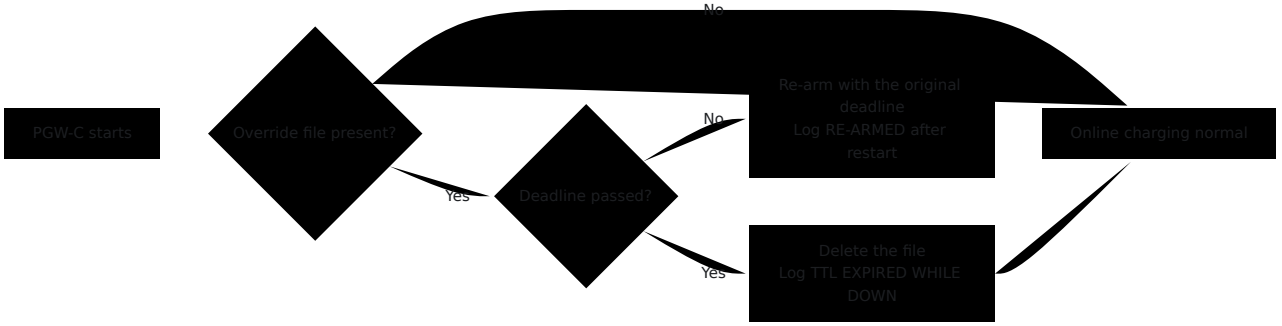

□□□□□□TTL□PGW-C□□□□□`expires_at`□

□□PGW-C□□□□□□

```
- alert: OnlineChargingOverrideActive
  expr: charging_override_active == 1
  for: 5m
  labels:
    severity: critical
  annotations:
    summary: "Online charging is bypassed on {{ $labels.instance
}}"
    description: "Subscriber usage is metered for CDRs but is not
rated online."
```

□□□□

□□□□□□400

□□: □□□□□□□`ttl_seconds`□`reason`□

□□□□:

- `ttl_seconds`□□□`0`□□□□□□`86400`
- `reason`□□□□□

□□□□:

1. □`ttl_seconds`□□□`1`□`86400`□□□□□□
2. □`reason`□□□□□□□□□□□

□□□□□□

□□: □□□□□□□`relief.failed`□□`0`□

□□□□:

- □□□□□□□□□□□□□□□
- UPF□□□PFCP□□□□

□□□

- `gy.enabled`□`false`
- PCRF□Gx CCA `Online` AVP□□□□□

□□□□:

1. □□`charging`□`gy`□□□□□□□□□□□
2. □□`GET /api/charging/<imsi>`□□Gx CCA□□□□Diameter Gx□□□

□□□□

- Diameter Gy□□ - □□□□□□□□□□□□□□
- CDR□□ - □□□□□CDR□□
- □□□□□ - □□□□□□□□□
- □□□□ - □□□□□□□□□
- □□□□ - □□□

OmniPGW □□□□

runtime.exs □□□□□□□□

□ Omnitouch □□□□□□

□□

1. □□
2. □□□□□□□
3. □□□□
4. Diameter/Gx □□
5. S5/S8 □□
6. Gn/Gp □□ (GGSN)
7. Sxb/PFCP □□
   - UPF □□□□
   - □□ UPF □□□□□□□□
   - □□ DNS □□□
   - □□□□□
8. UE IP □□□
9. PCO □□
10. OAM API □□
11. □□□□
12. □□□□

□□

OmniPGW □□ □□□□□□□□□□ `config/runtime.exs` □□□□□□□□ □□□□□□□ □□□□□□□□□□ □□□□□□□□□□□□□□□□□

□□□□

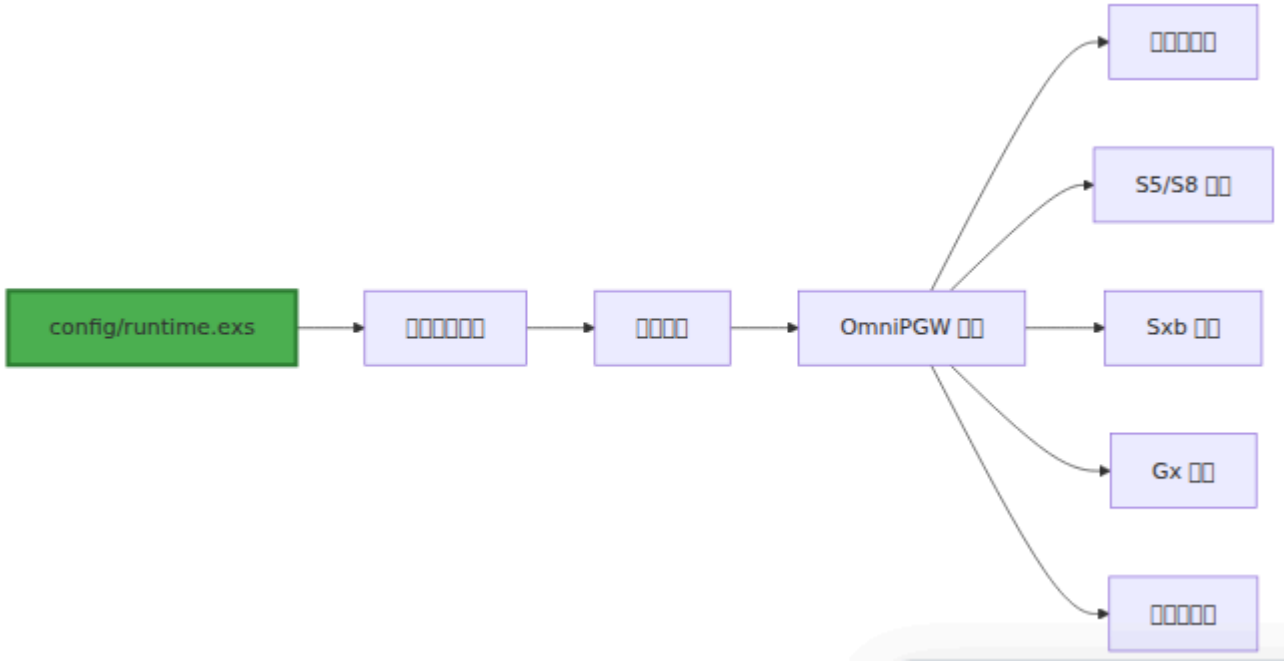

□□□□□□

- □□□□□□□ - □□□□□□□□□□□□
- □□□□□ - □□□□□□□□
- □□□□□□ - □□□□□□□□□□□
- □□□□□□□ - □□□□□□□□□□□□□

□□□□□□□

□□□□

```
pgw_c/
├── config/
│   ├── config.exs          # □□□□□□□□ runtime.exs□
│   ├── dev.exs             # □□□□□□□
│   ├── prod.exs            # □□□□□□□
│   └── runtime.exs         # ← □□□□□□□
```

□□□□

```
# config/runtime.exs
import Config

config :logger, level: :info

config :pgw_c,
  metrics: %{...},
  diameter: %{...},
  s5s8: %{...},
  sxb: %{...},
  ue: %{...},
  pco: %{...}
```

□□□□

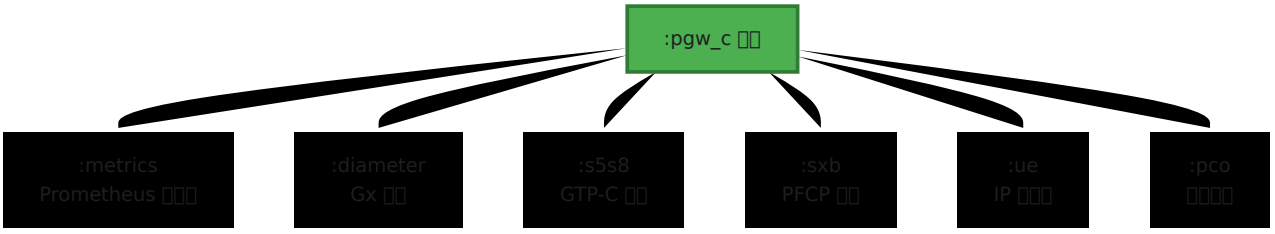

□□□□

□□

□□ Prometheus □□□□□□□□□ OmniPGW□

□□□

```
config :pgw_c,
  metrics: %{
    # □□/□□□□□□□□
    enabled: true,

    # □□ HTTP □□□□ IP □□
    ip_address: "0.0.0.0",

    # □□□□□□□
    port: 9090,

    # □□□□□□□□□□□□□
    registry_poll_period_ms: 10_000
  }
```

□□

□□	□□	□□□	□□
`enabled`	□□□	`true`	□□□□□□□
`ip_address`	□□□ □IP□	`"0.0.0.0"`	□□□□□0.0.0.0 = □□□□□
`port`	□□	`9090`	`/metrics` □□□ HTTP □ □
`registry_poll_period_ms`	□□	`10_000`	□□□□□□□□□□

□□

□□ - □□□□□ IP□

```
metrics: %{
  enabled: true,
  ip_address: "10.0.0.20",  # □□□□
  port: 9090,
  registry_poll_period_ms: 5_000  # □ 5 □□□□□
}
```

□□ - □□□□□□□□

```
metrics: %{
  enabled: true,
  ip_address: "127.0.0.1",
  port: 42069,  # □□□□□
  registry_poll_period_ms: 10_000
}
```

□□□□□

```
metrics: %{
  enabled: false
}
```

□□□□

```
# □□□□
curl http://<ip_address>:<port>/metrics

# □□
curl http://10.0.0.20:9090/metrics
```

□□□ □□□□□□□□ □□□□□□□□□□□□

Diameter/Gx □□

□□

□□ Gx □□□ Diameter □□□PCRF □□□□

□□□

```
config :pgw_c,
  diameter: %{
    # □□ Diameter □□□ IP □□
    listen_ip: "0.0.0.0",

    # OmniPGW □ Diameter □□□Origin-Host□
    host: "omnipgw.epc.mnc001.mcc001.3gppnetwork.org",

    # OmniPGW □ Diameter □□Origin-Realm□
    realm: "epc.mnc001.mcc001.3gppnetwork.org",

    # PCRF □□□□□
    peer_list: [
      %{
        # PCRF Diameter □□
        host: "pcrf.epc.mnc001.mcc001.3gppnetwork.org",

        # PCRF □
        realm: "epc.mnc001.mcc001.3gppnetwork.org",

        # PCRF IP □□
        ip: "10.0.0.30",

        # □□□ PCRF □□□
        initiate_connection: true
      }
    ]
  }
```

□□

□□	□□	□□	□□
`listen_ip`	□□□□IP□	□	Diameter □□□□
`host`	□□□□FQDN□	□	OmniPGW □ Origin-Host□□□□ FQDN□
`realm`	□□□□□□	□	OmniPGW □ Origin-Realm
`peer_list`	□□	□	PCRF □□□□□

□□□□□□

□□	□□	□□	□□
`host`	□□□□FQDN□	□	PCRF Diameter □□
`realm`	□□□□□□	□	PCRF □
`ip`	□□□□IP□	□	PCRF IP □□
`initiate_connection`	□□□	□	OmniPGW □□□□□ PCRF

FQDN □□

Diameter □□□□□ FQDN□

```
# □□
host: "omnipgw.epc.mnc001.mcc001.3gppnetwork.org"

# □□
host: "omnipgw"              # □□ FQDN
host: "10.0.0.20"            # □□□□□ IP
```

3GPP □□□

```
<hostname>.epc.mnc<MNC>.mcc<MCC>.3gppnetwork.org

□□□
- omnipgw.epc.mnc001.mcc001.3gppnetwork.org  (MCC=001, MNC=001)
- pgw-c.epc.mnc260.mcc310.3gppnetwork.org   (MCC=310, MNC=260 - □□
T-Mobile)
```

□□

□□ PCRF□

```
diameter: %{
  listen_ip: "0.0.0.0",
  host: "omnipgw.epc.mnc001.mcc001.3gppnetwork.org",
  realm: "epc.mnc001.mcc001.3gppnetwork.org",
  peer_list: [
    %{
      host: "pcrf.epc.mnc001.mcc001.3gppnetwork.org",
      realm: "epc.mnc001.mcc001.3gppnetwork.org",
      ip: "10.0.0.30",
      initiate_connection: true
    }
  ]
}
```

□□ PCRF□□□□□

```
diameter: %{
  listen_ip: "0.0.0.0",
  host: "omnipgw.epc.mnc001.mcc001.3gppnetwork.org",
  realm: "epc.mnc001.mcc001.3gppnetwork.org",
  peer_list: [
    %{
      host: "pcrf-primary.epc.mnc001.mcc001.3gppnetwork.org",
      realm: "epc.mnc001.mcc001.3gppnetwork.org",
      ip: "10.0.1.30",
      initiate_connection: true
    },
    %{
      host: "pcrf-backup.epc.mnc001.mcc001.3gppnetwork.org",
      realm: "epc.mnc001.mcc001.3gppnetwork.org",
      ip: "10.0.2.30",
      initiate_connection: true
    }
  ]
}
```

PCRF □□□□□□

```
diameter: %{
  listen_ip: "0.0.0.0",
  host: "omnipgw.epc.mnc001.mcc001.3gppnetwork.org",
  realm: "epc.mnc001.mcc001.3gppnetwork.org",
  peer_list: [
    %{
      host: "pcrf.epc.mnc001.mcc001.3gppnetwork.org",
      realm: "epc.mnc001.mcc001.3gppnetwork.org",
      ip: "10.0.0.30",
      initiate_connection: false  # □□ PCRF □□
    }
  ]
}
```

□□□ Diameter Gx □□□□

S5/S8 □□

□□

□□□ SGW-C □□□ GTP-C □□□

□□□

```
config :pgw_c,
  s5s8: %{
    # S5/S8 □□□□□ IPv4 □□
    local_ipv4_address: "10.0.0.20",

    # □□□□□ IPv6 □□
    local_ipv6_address: nil,

    # □□□□□□□ GTP-C □□□2123□
    local_port: 2123,

    # GTP-C □□□□□□□□□□□□500□□□
    # □□ GTP-C □□□□□□□□□□
    request_timeout_ms: 500,

    # GTP-C □□□□□□□□□□□3□
    # □□□□□□□ = request_timeout_ms * request_attempts
    request_attempts: 3
  }
```

□□

□□	□□	□□□	□□
`local_ipv4_address`	□□□□IPv4□	□□	S5/S8 □□□ IPv4 □□
`local_ipv6_address`	□□□□IPv6□	`nil`	S5/S8 □□□ IPv6 □□□□□□
`local_port`	□□	`2123`	GTP-C □ UDP □□□□□□□ 2123□
`request_timeout_ms`	□□	`500`	□□□□□□□□□□□□
`request_attempts`	□□	`3`	□□□□□□□□

□□□□

- □□□ GTP-C □□ 2
- □□□ UDP
- □□□□□ 2123
- □□□ □ SGW-C □□

□□

□ IPv4□□□□□

```
s5s8: %{
  local_ipv4_address: "10.0.0.20"
}
```

IPv4 + IPv6 □□□

```
s5s8: %{
  local_ipv4_address: "10.0.0.20",
  local_ipv6_address: "2001:db8::20"
}
```

□□□□□□□□□□□□

```
s5s8: %{
  local_ipv4_address: "10.0.0.20",
  local_port: 2124  # □□□□□
}
```

□□□□□□

```
s5s8: %{
  local_ipv4_address: "10.0.0.20",
  request_timeout_ms: 1500,  # □□□□ 1.5 □
  request_attempts: 3         # □□□□□ 4.5 □
}
```

□□□□

S5/S8 □□□□□□□□□□□□□□ GTP-C □□/□□□□□□□□□□□□□□□□□□□□□□□□□□□□

□□□□□□□□□

```
□□□□□□ = request_timeout_ms × request_attempts
□□□500□□ × 3 = 1.5 □
```

□□□□□

□□□□	□□□□	□□□□□
□□□□<50ms□	200-300□□	600-900□□
□□□50-150ms□	500□□□□□□	1.5□
□□□□>150ms□	1000-2000□□	3-6□
□□/□□□	2000-3000□□	6-9□

□□□□□

- □□□□ □□□□□□“□□□□□□□□”□□□□ Wireshark □□□□□□□
- □□□□ □□□□□□□□□□□□□□□□□
- □□□□□□ □□□□□□□□□□□□□

□□□□□

- □□□□□□□□□□"□□□□□□□□□"
- □□□ PCRF □ Diameter □□□□□□□ 5012□□□□□□
- □ Charging-Rule-Remove □□□□□□□□□□□□□□□□□□□□

□□□□

IP □□□□□

- □□□□□□□□/□□□□
- □□□□□ SGW-C □□□□□□
- □□□□□VRRP/HSRP□□□□□□□□

□□□□□□

```
# □□ SGW-C □ GTP-C
iptables -A INPUT -p udp --dport 2123 -s <sgw_c_network> -j ACCEPT
```

Gn/Gp □□ (GGSN)

□□

□□□ SGSN □□□ GTP-C v1 □□□□ GGSN □□□□ 2G/3G □□□

□□□

```
config :pgw_c,
  gn: %{
    # Gn □□□□□□ IPv4 □□
    local_ipv4_address: "10.0.0.20",

    # □□□□□□ IPv6 □□□□□□□□ 2G/3G □□□□□□ IPv4□
    local_ipv6_address: nil,

    # GTP-C □□□□□ S5/S8 □□□□
    local_port: 2123
  },

  # □ PCO □□□□□ DNS □□□□□□ S5/S8 □□□□
  dns: %{
    primary_ipv4: {8, 8, 8, 8},
    secondary_ipv4: {8, 8, 4, 4}
  }
```

□□

□□	□□	□□□□	□□
`local_ipv4_address`	□□□□□IPv4□	□□	Gn □□□□ IPv4 □□□GGSN □□□□
`local_ipv6_address`	□□□□□IPv6□	`nil`	Gn □□□□ IPv6 □□□□□□□□□□□□
`local_port`	□□	`2123`	GTP-C v1 □ UDP □□□□□ S5/S8 □□□□

DNS □□

□□	□□	□□□	□□
`primary_ipv4`	□□	`{8, 8, 8, 8}`	PCO □□□□ DNS □□□
`secondary_ipv4`	□□	`{8, 8, 4, 4}`	PCO □□□□□ DNS □□□

□□□□

- □□□ GTP-C □□ 1 (3GPP TS 29.060)
- □□□ UDP
- □□□□□ 2123□□ GTP-C v2 □□□
- □□□ □ SGSN □□

□ S5/S8 □□□

OmniPGW □□□□□□ PGW□4G□□ GGSN□2G/3G□□□□

- □□□□□□ UDP □□ 2123
- GTP □□□□□□□□□□□
- □□ IP □□□□□□□ 4G □ 2G/3G □□
- □□□□□□□IP □□UPF/PFCP□□□□□

□□□ Gn/Gp □□□□

Sxb/PFCP □□

□□

□□□ PGW-U□□□□□□□□□ PFCP □□□

□□□

```
config :pgw_c,
  sxb: %{
    # PFCP □□□□□□ IP □□
    local_ip_address: "10.0.0.20",

    # □□□□□□□□ PFCP □□□8805□
    local_port: 8805
  }
```

□□

□□	□□	□□□	□□
`local_ip_address`	□□□□IP□	□□	PFCP □□□□
`local_port`	□□	`8805`	PFCP UDP □□

> □□□
>
> - □□ **UPF** □□□□□□□□□□ `upf_selection` □□□□□ + □□□□□□□□□
> - □□□□□ UPF □□□□□□□□□
>   - □□□□□□□□□`"UPF-<ip>:<port>"`
>   - □□ PFCP □□□□□ UPF □□□
>   - 5 □□□□□
> - UPF □□□□□□□□□□ `upf_selection` □□□□□□□□□□□ UPF □□□□□
> - □□□□ UPF □□□□□□□□□□□□ DNS □□□ UPF

□□

□□□□□

```
sxb: %{
  local_ip_address: "10.0.0.20"
}

# □□ upf_selection □□ UPF □□□□□□□□
# - □□□□□□□□□“UPF-10.0.0.21:8805”
# - □□ PFCP □□□□□□ UPF □□□
# - 5 □□□□□□
```

□□□ PFCP □□□

```
sxb: %{
  local_ip_address: "10.0.0.20",
  local_port: 8806  # □□□ PFCP □□
}
```

□□ UPF □□□□□□□□□

```
sxb: %{
  local_ip_address: "10.0.0.20"
},
upf_selection: %{
  rules: [
    %{
      name: "IMS □",
      priority: 10,
      match_field: :apn,
      match_regex: ~r/^ims$/,
      upf_pool: [
        %{remote_ip_address: "10.0.1.21", remote_port: 8805,
weight: 100},
        %{remote_ip_address: "10.0.1.22", remote_port: 8805,
weight: 100}
      ]
    }
  ],
  fallback_pool: [
    %{remote_ip_address: "10.0.2.21", remote_port: 8805, weight:
100}
  ]
}
# □□ 3 □ UPF□10.0.1.21□10.0.1.22□10.0.2.21□□□□□□
```

□□ DNS □□□□□□□□□□□

```
sxb: %{
  local_ip_address: "10.0.0.20"
},
upf_selection: %{
  dns_enabled: true,
  dns_query_priority: [:ecgi, :tai],
  dns_suffix: "epc.3gppnetwork.org",
  fallback_pool: [
    %{remote_ip_address: "10.0.2.21", remote_port: 8805, weight:
100}
  ]
}
# DNS □□□ UPF □□□□□□□□□□□
```

UPF □□□□

□□□UPF □□□□□□□□□□ UPF □□□□□□ `upf_selection` □□□□□□□□□

□□□□

UPF □□□ **`upf_selection`** □□□□□□□□□

1. □□□□ - □□□□□□□□□□□□□□□
2. **DNS** □□ - □□□□□□□□ UPF □□
3. □□□ - □□□□□□□□□ DNS □□□□□□□□

□□□□□□□□

1. □□□□□□□□□□□□ - □□□□□□□□□□□□□□□
2. □□ **DNS** □□□□□□□□□□□ - □□□□□□□□ UPF □□
3. □□□□□□□□□□□□ - □□□□□□□□□ DNS □□□□□□□□

UPF □□□□□□

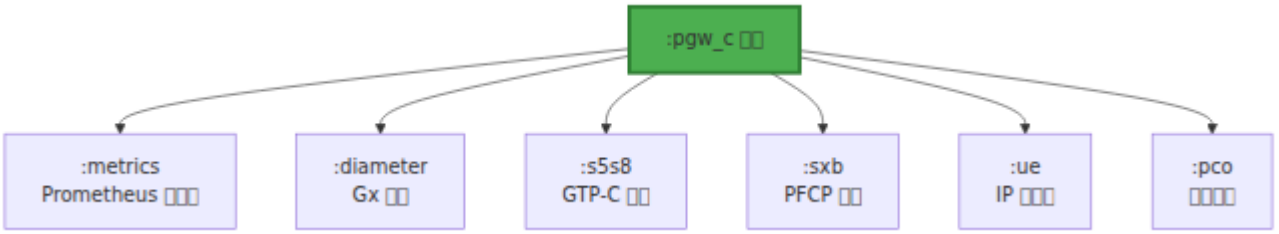

□□□□□□

□□□□□□□□□□□□□□□□□□□□

□□□□	□□	□□□□
`:imsi`	□□□□□□□□	`^001001.*`□□□□□□
`:apn`	□□□□ / DNN	`^internet\.` □ `^ims\.`
`:serving_network_plmn_id`	□□□□□□□	`^001001$`
`:sgw_ip_address`	SGW IP □□	`^10\.100\..*`
`:uli_tai_plmn_id`	□□□ PLMN ID	`^313.*`
`:uli_ecgi_plmn_id`	E-UTRAN □□ PLMN ID	`^313.*`

□□□□□

□□	□□□□	□□	□□
UPF □	□□□□	□□□□□□□□□□□□□□□	□□□ UPF
□□ **APN**	□□□□□	□□□ IMS/□□	□□□
□□ **IMSI**	□□□	□□□	□□□□□□□
□□ **DNS**	MEC/□□□	□□□□□□□	□□ DNS □□□
□□	□□	□□ UPF	□□□□□□□
□□□□	□□□	□□□	□□□□□

□□□□□□□□

□□□□□□□UPF□□□PCO□□□□□□□□□□□□□□□□□□□□

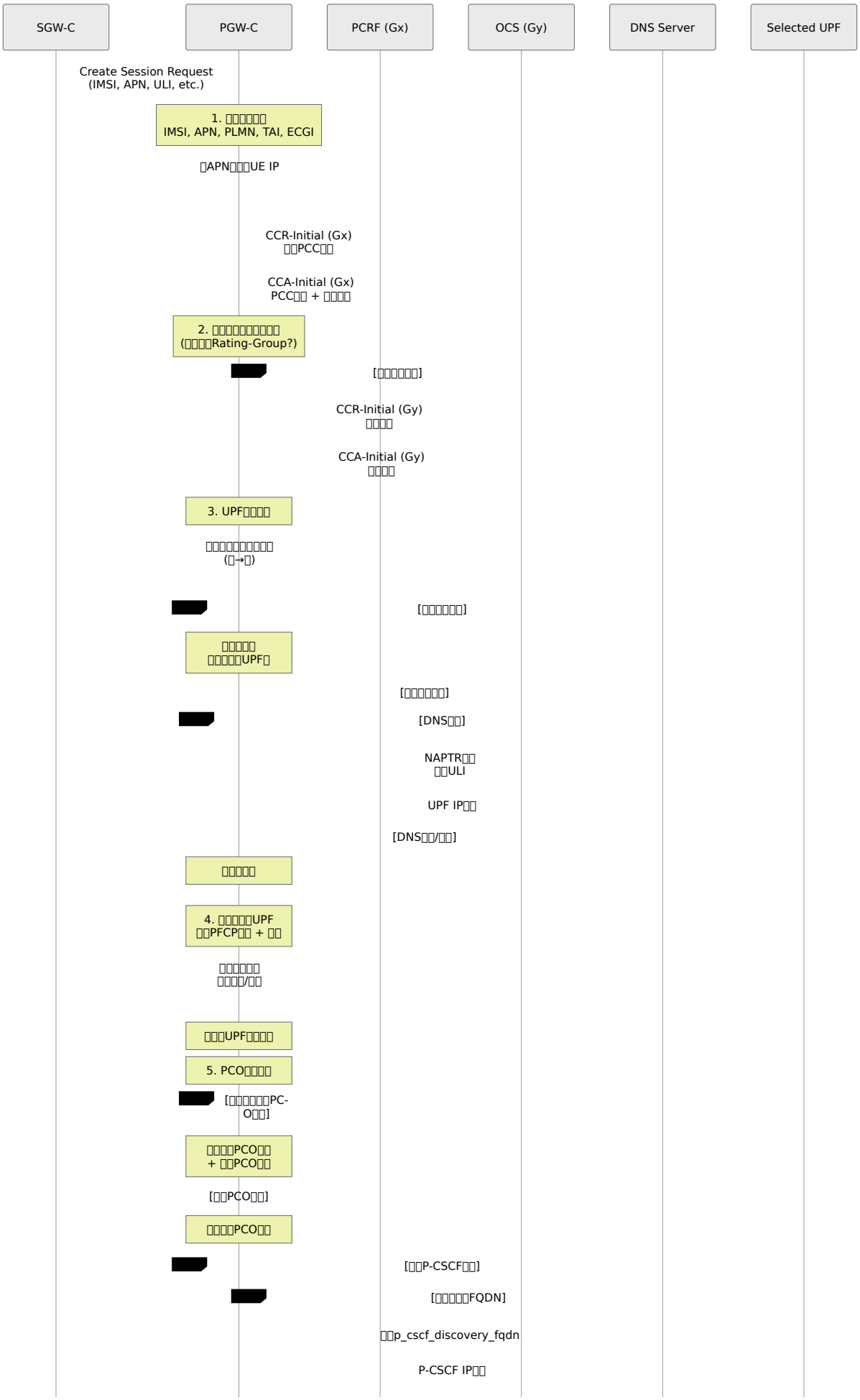
SGW-C
PGW-C
PCRF (Gx)
OCS (Gy)
DNS Server
Selected UPF
Create Session Request
(IMSI, APN, ULI, etc.)
1. □□□□□□□
IMSI, APN, PLMN, TAI, ECGI
□APN□□□UE IP
CCR-Initial (Gx)
□□PCC□□
CCA-Initial (Gx)
PCC□□ + □□□□
2. □□□□□□□□□□□□
(□□□□Rating-Group?)
[□□□□□□□]
CCR-Initial (Gy)
□□□□
CCA-Initial (Gy)
□□□□
3. UPF□□□□
□□□□□□□□□□□□
(□→□)
[□□□□□□□]
□□□□□□
□□□□□UPF□
[□□□□□□□]
[DNS□□]
NAPTR□□
□□ULI
UPF IP□□
[DNS□□/□□]
□□□□□□
4. □□□□□UPF
□□PFCP□□ + □□
□□□□□□□
□□□□□/□□
□□□UPF□□□□
5. PCO□□□□
[□□□□□□□PC-
O□□]
□□□□PCO□□
+ □□PCO□□
[□□PCO□□]
□□□□PCO□□
[□□P-CSCF□□]
[□□□□□FQDN]
□□p_cscf_discovery_fqdn
P-CSCF IP□□

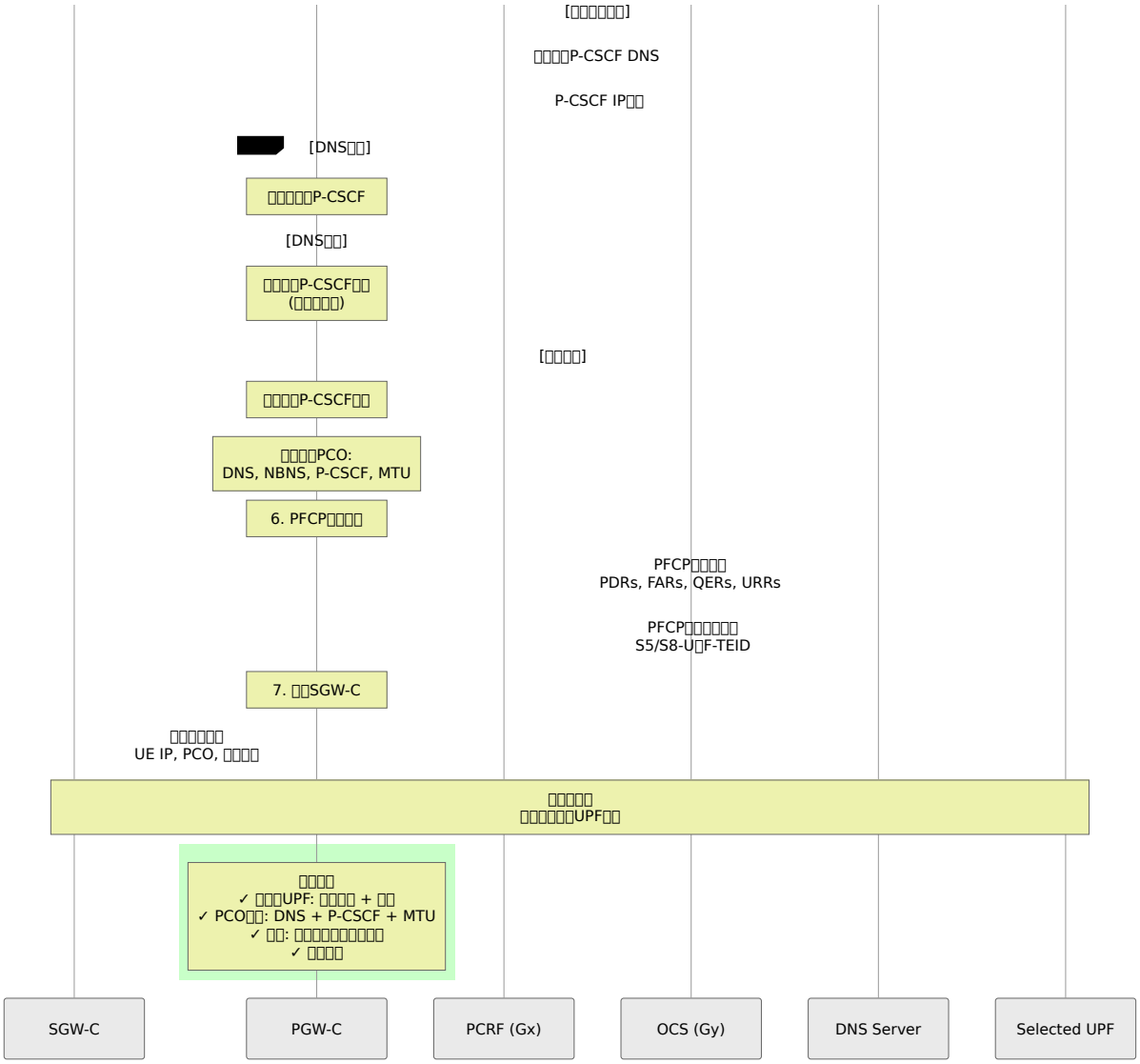

□□□□□□

1. **UPF□□□□□□**
   - □□□□□□□□□□□□→ DNS□□ → □□□
   - □□□□□□□□□□□□
   - □□□□□□□□/□□□□
   - □□□ PFCP□□ □□□UPF□□□□□□
2. **PCO□□□□□□**
   - □□PCO□□ → P-CSCF DNS□□ → □□PCO□□
   - □□□□□□□□□□□□□□□□□□□□□□□□□□□□
   - □□□ PCO□□ □□□□□□□PCO□□
3. **P-CSCF□□□□□□**

- □□□FQDN → □□DNS□□ → □□□□PCO → □□□□PCO
- □□□ P-CSCF□□ □□□□□□□□□□□□□□

4. □□□□□

- PCRF□□□□□□□□□□□□Rating-Group + Online=1□
- OCS□□□□□□□□□□□□
- PGW-C□□□□□□□CCR-Update□□□□
- □□□ Diameter Gx□□ □ Diameter Gy□□ □□□□□□□□□

□□□□□□

□□□□□□□□□□□□□□□□□UPF□□□□□□□□□□□

```
config :pgw_c,
  # PFCP□□ - □□UPF□□upf_selection□□□□
  sxb: %{
    local_ip_address: "127.0.0.20"
  },

  # UPF□□□□ - □□□□□□□□UPF□□□□□□
  upf_selection: %{
    # □□DNS□□□□□□
    dns_enabled: false,
    dns_query_priority: [:ecgi, :tai, :rai, :sai, :cgi],
    dns_suffix: "epc.3gppnetwork.org",
    dns_timeout_ms: 5000,

    # □□□□□□□□□□□□□□□□□□□□
    rules: [
      # □□1□IMS□□ - □□□□□
      %{
        name: "IMS Traffic",
        priority: 20,
        match_field: :apn,
        match_regex: "^ims",
        upf_pool: [
          %{remote_ip_address: "10.100.2.21", remote_port: 8805,
weight: 80},
          %{remote_ip_address: "10.100.2.22", remote_port: 8805,
weight: 20}
        ]
      },

      # □□2□□□APN
      %{
        name: "Enterprise Traffic",
        priority: 15,
        match_field: :apn,
        match_regex: "^(enterprise|corporate)\.apn",
        upf_pool: [
          %{remote_ip_address: "10.100.3.21", remote_port: 8805,
weight: 100}
        ]
      },

      # □□3□□□□□□ - □□□□
```

```
      %{
        name: "Internet Traffic",
        priority: 5,
        match_field: :apn,
        match_regex: "^internet",
        upf_pool: [
          %{remote_ip_address: "10.100.1.21", remote_port: 8805,
weight: 33},
          %{remote_ip_address: "10.100.1.22", remote_port: 8805,
weight: 33},
          %{remote_ip_address: "10.100.1.23", remote_port: 8805,
weight: 34}
        ]
      }
    ],

    # □□□ - □□□□□□□□□DNS□□□□□
    fallback_pool: [
      %{remote_ip_address: "127.0.0.21", remote_port: 8805,
weight: 100}
    ]
  }
```

□□□□

□□□□□

- □ □□□□□□□□□□ `upf_selection` □UPF□□□□□□□□
- □ □□□□□□□□UPF□□□□□□□□□□□□□□□□
- □ □□□□□□□□□□□ `upf_pool` □□□□□□□□□UPF□
- □ □□□□□□□□□□ `fallback_pool` □□□□□□□□
- □ **DNS**□□□DNS□□□□□□□□□□
- □ □□□□□□□□□□□□□□□□DNS□□□UPF
- □ □□□□□□□□□□□□UPF□□5□□□□□□□□

□□□□□□□□□

- □□□ `sxb.peer_list` □□□□□□□□□
- □□□□□□□□□□□□□ `selection_list`

- □□UPF□□□□□□□`upf_selection`□□□□□□□□

UPF□□□□□□□

1. □□□□□□□□□□□□□□□UPF□□□□
    - □□ = PFCP□□□□ + □□□□□□□□□3□
    - □□□□UPF□□□□□□□
    - □□□□□□□□UPF□□□□□□□□UPF□□□□□□□
2. □□/□□□□□□□`weight: 0`□□□□UPF
    - □□**UPF**□weight > 0□□□□□□□□□□
    - □□**UPF**□weight == 0□□□□□□□□UPF□□□□□□□
    - □□□□□UPF□□□`weight: 1`
3. □□□□□□□□□□□□□□□□□□□□□□□□□□□□□□□UPF
    - □□□□□□□□70%□□□.21□20%□□□.22□10%□□□.23
    - □□□□□ = □□□□□□□□UPF
    - □□□□□ = □□□□
4. □□□□□□□□□□□UPF□□□□□□□□□
    - □□□□□□□□`"UPF-<ip>:<port>"`
    - □□□□□□□PFCP□□□5□□□
    - □□□□□□UPF□□□□□□□□

□□□□□□□□□/□□

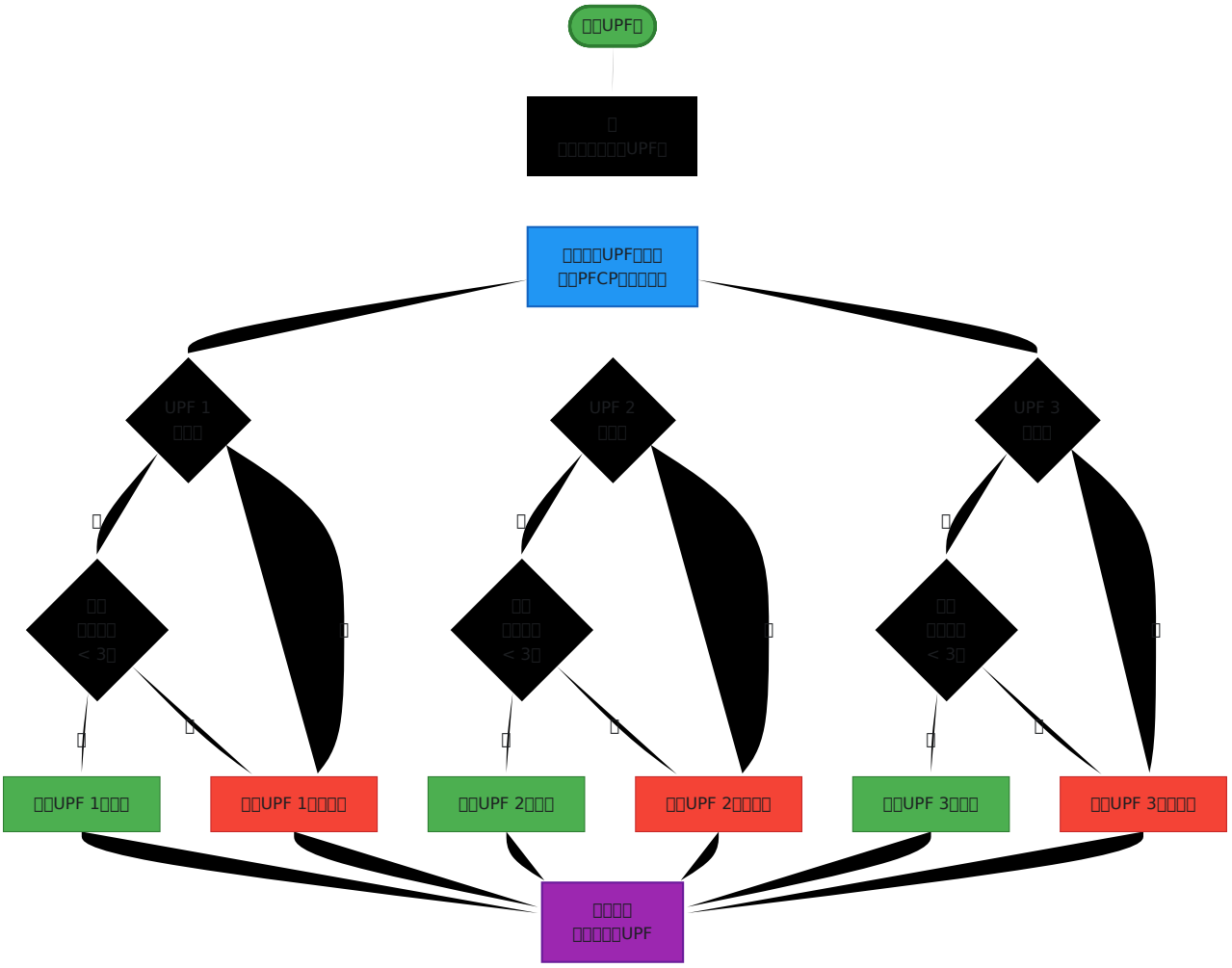
□□UPF□
□
□□□□□□□□UPF□
□□□□UPF□□□
□□PFCP□□□□□
UPF 1
□□□
UPF 2
□□□
UPF 3
□□□
□
□
□
□□
□□□□
< 3□
□□
□□
□□
□□
□□
□□
□□UPF 1□□□
□□UPF 1□□□□
□□UPF 2□□□
□□UPF 2□□□□
□□UPF 3□□□
□□UPF 3□□□□
□□□□
□□□□□UPF


□□□□□
UPF□
□
□□□□□
□□□□ > 0
□□□□ = 0
□
□□□□□
□□ > 0
UPF□
□
□□□□□□□□□UPF
□□□□□□□□□□
□□□□□□□=0
□□UPF
□□□
□
□□□□□□□
□□□□□□□□
□□□□□UPF□
□□□□UPF

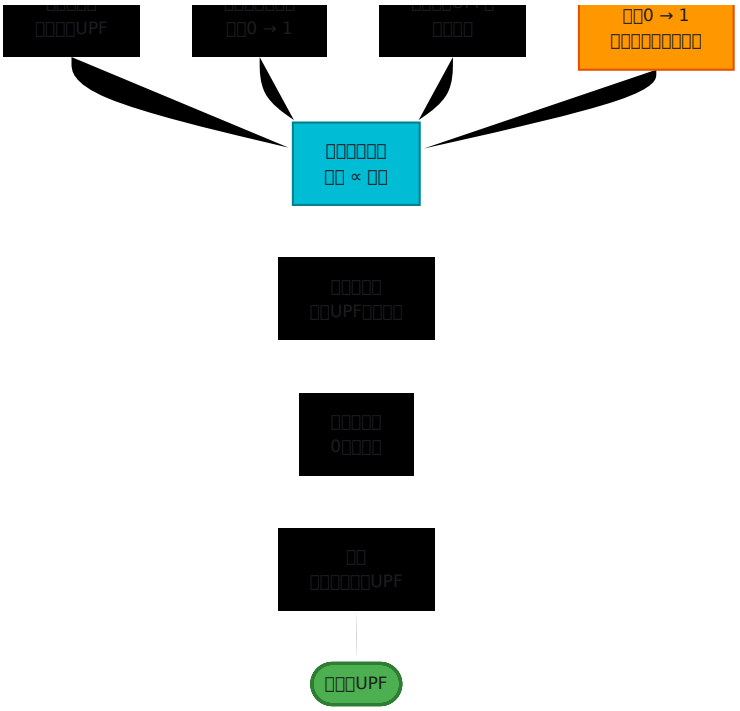

□□□□□□□□□□

```
□: [
  UPF-A: □□ 50, □□ ✓
  UPF-B: □□ 30, □□ ✓
  UPF-C: □□ 20, □□ ✓
]

□□□: 50 + 30 + 20 = 100

□□□□:
  UPF-A: 0-49   (50%)
  UPF-B: 50-79  (30%)
  UPF-C: 80-99  (20%)

□□□: 63 → □□UPF-B
□□□: 15 → □□UPF-A
□□□: 91 → □□UPF-C
```

□□/□□□□□□□□□□

```
□□□: [
  UPF-A: □□ 100, □□ ✓   (□□)
  UPF-B: □□ 0, □□ ✓     (□□)
]

□□1: UPF-A□□
→ □□□□□: [UPF-A: 100]
→ □□□□□UPF-A

□□2: UPF-A□□
→ □□□□UPF□□
→ □□□□: [UPF-B: 1]
→ □□□□□□□□UPF-B
→ □□: "□□□□UPF□□□□□□□□UPF"

□□3: □□□□□□
→ □□□□UPF
→ □□□□□: [UPF-A: 100, UPF-B: 0]
→ □□□□□□□□□□□□□□□□□□□□□□
→ □□: "□□□□□□□UPF□□□□□□□□□□"
```

□□□□□□□□

```
# □□□□□□□□25%□
upf_pool: [
  %{remote_ip_address: "10.0.1.1", remote_port: 8805, weight: 1},
  %{remote_ip_address: "10.0.1.2", remote_port: 8805, weight: 1},
  %{remote_ip_address: "10.0.1.3", remote_port: 8805, weight: 1},
  %{remote_ip_address: "10.0.1.4", remote_port: 8805, weight: 1}
]

# □/□□□□□□90% / 10%□
upf_pool: [
  %{remote_ip_address: "10.0.1.21", remote_port: 8805, weight:
90},
  %{remote_ip_address: "10.0.1.22", remote_port: 8805, weight: 10}
]

# □□/□□□100%□□0%□□□□□□□□□
upf_pool: [
  %{remote_ip_address: "10.0.1.21", remote_port: 8805, weight:
100},  # □□
  %{remote_ip_address: "10.0.1.22", remote_port: 8805, weight: 0}
# □□□□□□□□□□□□
]

# □□□□□□□□□□□□□□□□□□□□
upf_pool: [
  %{remote_ip_address: "10.0.1.1", remote_port: 8805, weight:
100},   # □□
  %{remote_ip_address: "10.0.1.2", remote_port: 8805, weight: 0},
# □□1
  %{remote_ip_address: "10.0.1.3", remote_port: 8805, weight: 0}
# □□2
]
# □□□□□□□□100%□□□□□□□□□□□□□50/50%□

# A/B□□□50% / 50%□
upf_pool: [
  %{remote_ip_address: "10.0.1.100", remote_port: 8805, weight:
50},  # □□□
  %{remote_ip_address: "10.0.1.200", remote_port: 8805, weight:
50}   # □□□
]
```

□□□

- □□/□□□□□□□□□□□`weight: 0`□□□□□UPF□□□□□UPF□□□□□
- □□□□**HA**□□UPF□□PFCP□□□□□□□□□□□□□□□□
- □□□□□□□□□UPF□□□□□□□□□□□□
- □□□□□□□□□□□□□□□UPF□□
- □□□□□□□□□□□□□□□□□□□□□□□□□□95%□□5%□□
- □□□□□□□□□□□□□□□□□□□□□□UPF
- □□□□□□□□□UPF□□□□□□□

PCO□□□□□□□□□□□

□□UPF□□□□□□□□□□□□□□□□□□PCO□□□□□□□□□□□□□□□□□PCO□□□□□□□□□APN□□□□□□□□□□□□□□□□□□

PCO□□□□□□□□

1. □□□□□□□□□□□□□□PCO□□
2. □□□□□□□□□□□□□□□□`pco`□□□□□
3. □□□□□□□□□□□□□□□□□PCO□□
4. □□□□□□□□□PCO□□□□□PCO

PCO□□□□

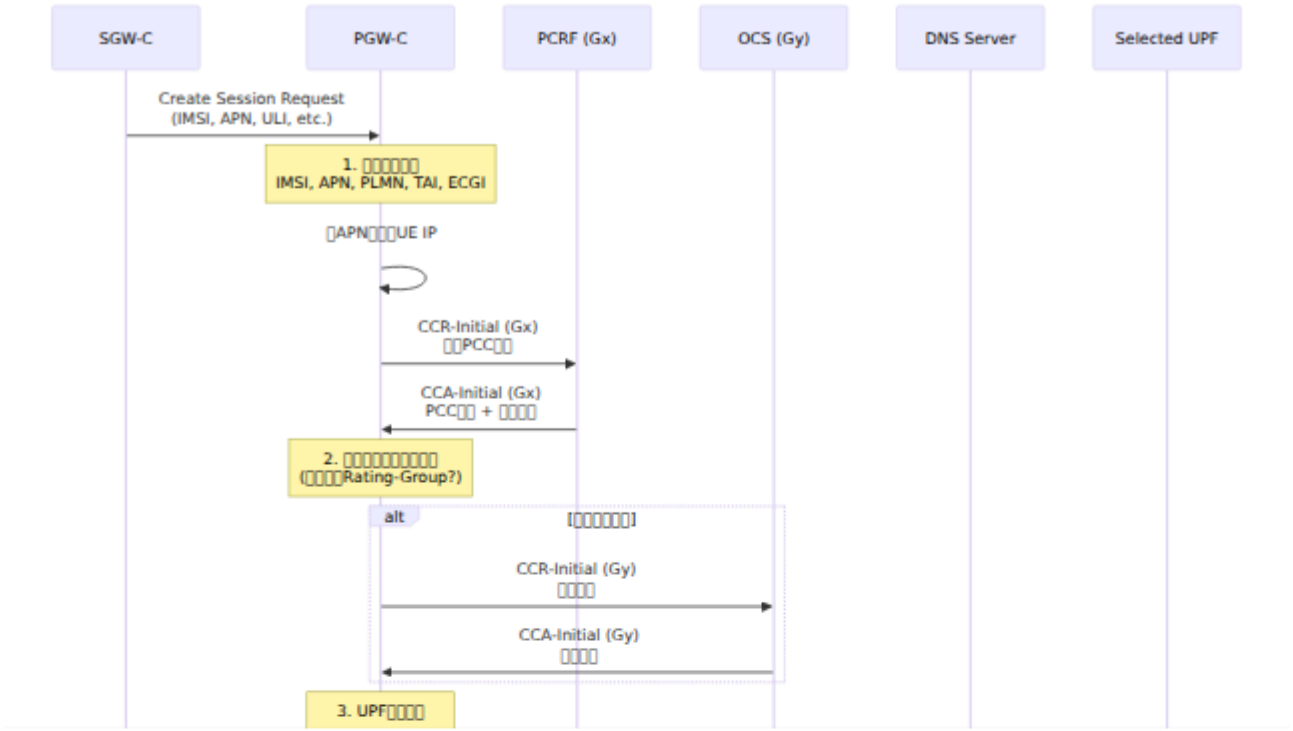

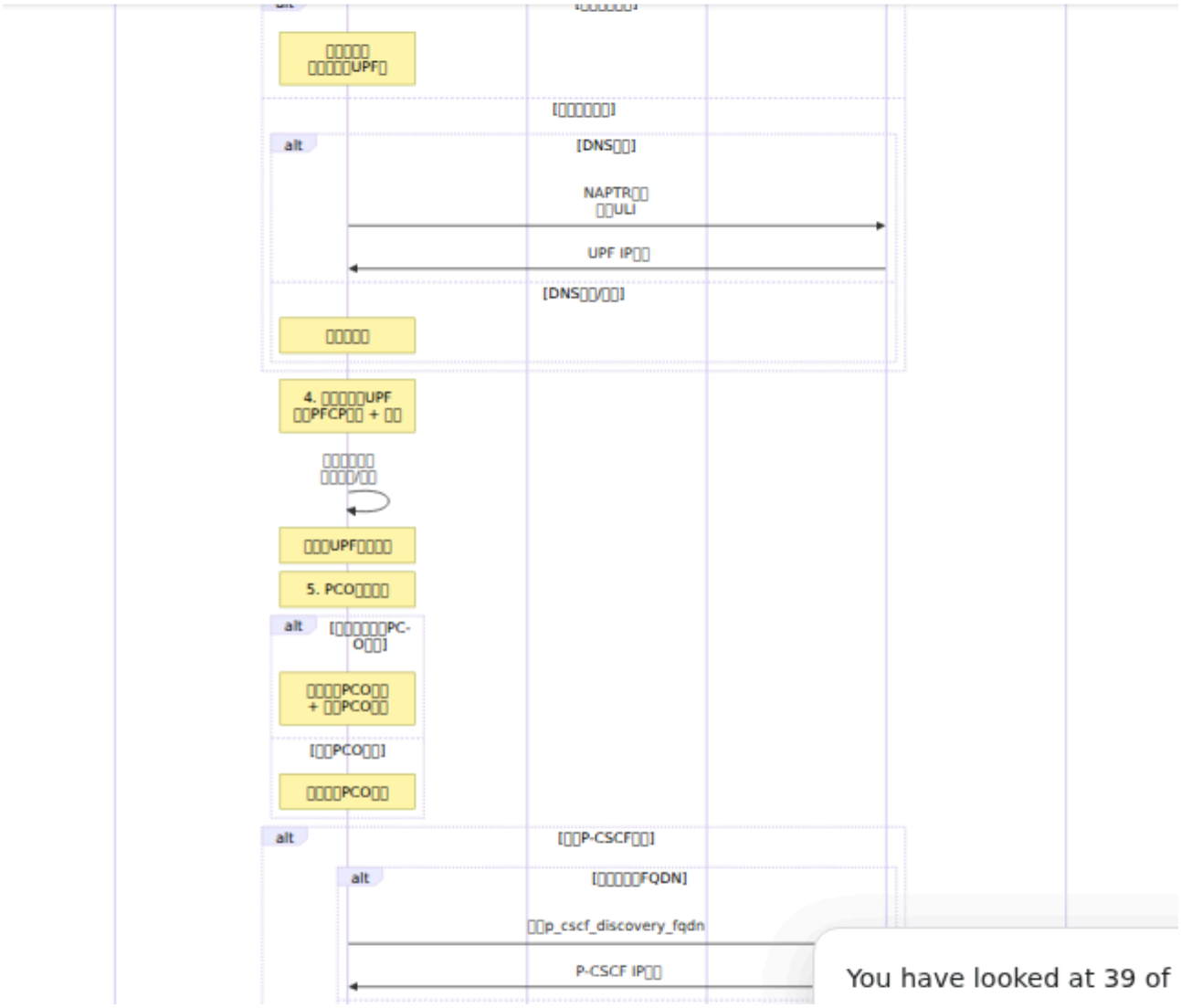

You have looked at 39 of

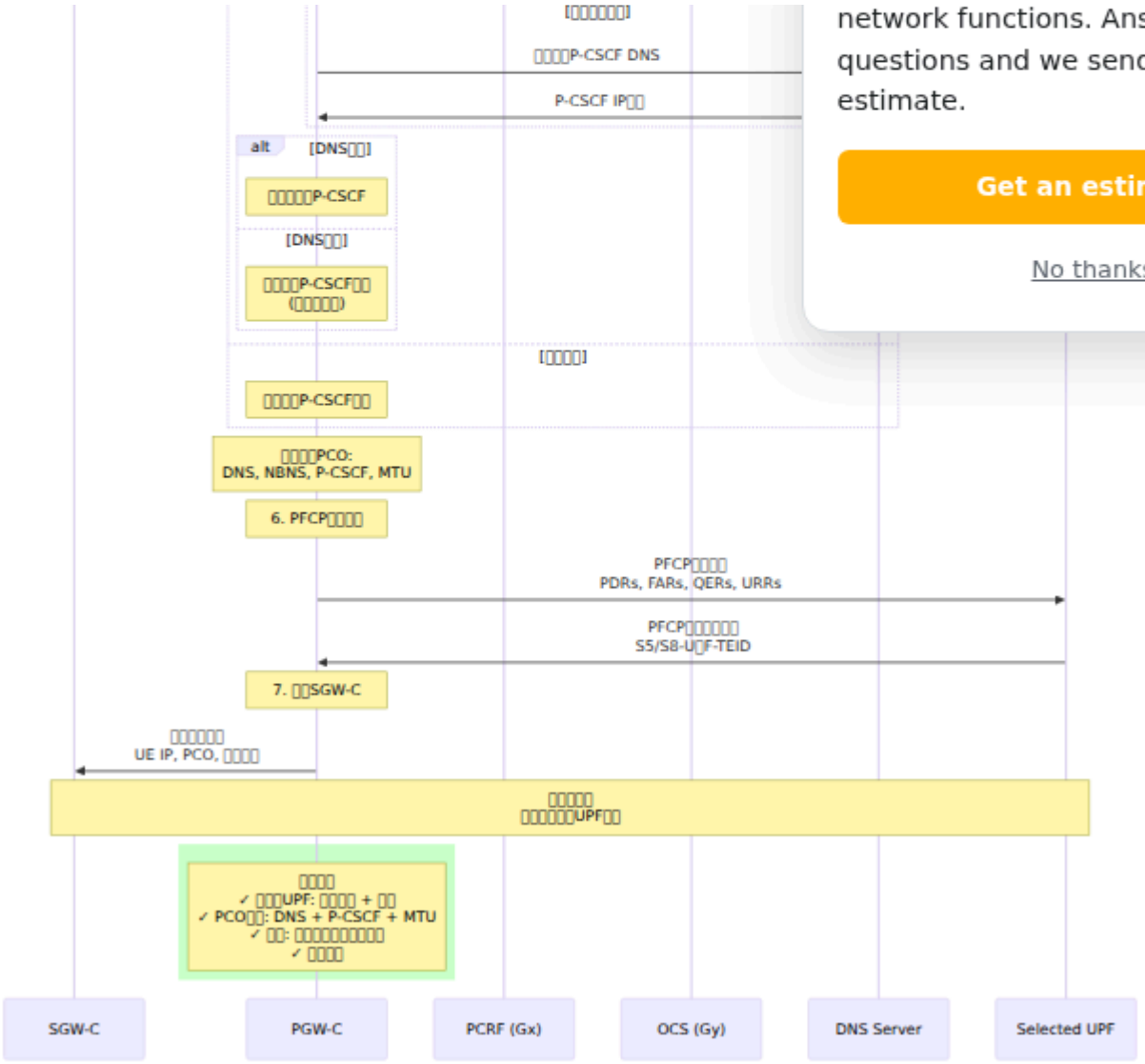

network functions. Answe
questions and we send y
estimate.
Get an estima
No thanks

□□PCO□□□□□□□□□□

1. **□□PCO□□□□□□□□□□**
2. **P-CSCF DNS**□□□□□□□P-CSCF□□□
3. **□□PCO□□□□□□□□□/□□□**

□□□IMS□□□□DNS□□□□□□□□□□□□

```
IMS□□□□□□“IMS□□”□□□□
├─ DNS□□□□□□□□□□□□□□□□□□□□
├─ P-CSCF□□□DNS□□□□□□□□p_cscf_discovery_fqdn□
│  └─ □□□□□□DNS□□□□□□□□□
└─ MTU□□□□□□□□□□□□□□□□

□□□□□□□□“□□□□”□□□□
├─ DNS□□□□□□□□□□192.168.1.10, 192.168.1.11□
├─ P-CSCF□□□□□□□□□□□□□□□□
└─ MTU□□□□□□□1500□

□□□□□□□□□□□□□□
├─ DNS□□□□□□□□□
├─ P-CSCF□□□□□□□□□□□□□□□□□□□DNS
└─ MTU□□□□□□
```

□□□PCO□□□□□

- `primary_dns_server_address` - □DNS□□□IP□IPv4□
- `secondary_dns_server_address` - □DNS□□□IP□IPv4□
- `primary_dns_server_ipv6_address` - □DNS□□□IP□IPv6□□□0x0003□
- `secondary_dns_server_ipv6_address` - □DNS□□□IP□IPv6□□□0x0003□
- `primary_nbns_server_address` - □WINS□□□IP
- `secondary_nbns_server_address` - □WINS□□□IP
- `p_cscf_ipv4_address_list` - P-CSCF□□□IP□IPv4□□□□□IMS□□□0x000C□ - □□ PCO□□ □ P-CSCF□□ □□□□□P-CSCF□□
- `p_cscf_ipv6_address_list` - P-CSCF□□□IP□IPv6□□□□□IMS□□□0x0001□
- `ipv4_link_mtu_size` - MTU□□□□□□□□□□

□□□□P-CSCF□□□

□□PCO□□□□UPF□□□□□□□□□□□P-CSCF□□□

- `p_cscf_discovery_fqdn` - □□□□□□□□□□DNS□P-CSCF□□□FQDN□□□□"pcscf.mnc001.mcc001.3gppnetwork.org"□

□□□□□□□□□

1. PGW-C □□□□□□□□□□□□ FQDN □□ DNS □□
2. DNS □□□□□ P-CSCF IP □□□□
3. □□□ P-CSCF □□□□ PCO □□□ UE
4. □□ DNS □□□□□□□□□ PCO □□□□ `p_cscf_ipv4_address_list`□□□□□□□□□ PCO □□
5. □□□□□□□□/□□□□□□□ P-CSCF □□

□□□□□□□□□□□□

- **IMS APNs** - □□□ IMS □□□□□□□ P-CSCF □□□
- □□□□□ - □□□□□□□□□ P-CSCF □□□□
- □□□□ - DNS □□ UE □□□□□□□ P-CSCF
- □□□□ - DNS □□□□□□□□ P-CSCF □□□

□□□□□□□□ **P-CSCF** □ **IMS** □□□

```
rules: [
  %{
    name: "IMS Traffic",
    priority: 20,
    match_field: :apn,
    match_regex: "^ims",
    upf_pool: [
      %{remote_ip_address: "10.100.2.21", remote_port: 8805,
weight: 80},
      %{remote_ip_address: "10.100.2.22", remote_port: 8805,
weight: 20}
    ],
    # P-CSCF □□□□□□□□ DNS □□□□ P-CSCF □□
    # DNS □□□□□□ FQDN □□□□□ P-CSCF IP
    p_cscf_discovery_fqdn: "pcscf.mnc001.mcc001.3gppnetwork.org",
    # IMS □□□□□□□□ P-CSCF □□□□□□ DNS □□□□□□□□□
    pco: %{
      p_cscf_ipv4_address_list: ["203.0.113.100", "203.0.113.101"]
      # DNS□NBNS□MTU □□□□□ PCO □□□□□□□□
    }
  }
]
```

□□□□□ **UE IP** □□□

□□ UPF □□□□□□□ **UE IP** □□□□□□□□□□□□□□□□□□□□□

□□	□□□□□	□□□	□□□□
1. □□	*(□□□)*	PGW-C□□□□□□ □ UPF□	APN □□□ `ue.subnet_map`□□ □□ `:default`
2. □□□	`ue_ip_pool: "name"`	PGW-C□□□□□□ □ UPF□	□□□ `ue.subnet_map` □ `"name"`
3. UPF □□	`upf_assigns_ip: true`	UPF□PFCP CHV4□	UPF □□□□□

- `upf_assigns_ip` - □□□□□□□□ `false`□□□ `true` □□PGW-C □□ UE-IP-Address IE□□□□ **CHV4**□“UP □□”□□□□□□□□□□□□□□□□ UPF □ Created-PDR □□□□□□□□□□□□□□□□□□□□□□□□□□**UPF** □□□□□□□□□□□ **UPF** □□□□□□□□□ UPF □□□□□□□□□□□□□□ APN / PFCP □□□□□□□□□□—— PGW-C □□□□□□□□□□□□□□□
- `ue_ip_pool` - □□□□□□□□□□□□□□□□□□□□**PGW-C** □□□□□□ `ue.subnet_map` □□□□□□□□ PGW-C □□ UPF □□□□□□□□□□□□□□□□□□□□□□/□□ `100.64.20.0/24` □ UPF □□□□□□□□□□□□□□□□□□□□

```
# ue.subnet_map □□□□□□
ue: %{
  subnet_map: %{
    "ims_upf03" => ["100.64.20.0/24"],
    "ims_upf04" => ["100.64.21.0/24"],
    default:     ["100.64.16.0/24"]
  }
},
# □□□□□□□□□ UPF □□□□
upf_selection: %{
  rules: [
    %{name: "IMS→upf03", priority: 21, match_field: :apn,
match_regex: "^ims",
      upf_pool: [%{remote_ip_address: "10.179.1.42", remote_port:
8805, weight: 1}],
      ue_ip_pool: "ims_upf03"},
    %{name: "IMS→upf04", priority: 20, match_field: :apn,
match_regex: "^ims",
      upf_pool: [%{remote_ip_address: "10.179.1.45", remote_port:
8805, weight: 1}],
      ue_ip_pool: "ims_upf04"}
  ]
}
```

□□ — □□ 3□UPF □□ CHV4 □□ UE IP□□

```
rules: [
  %{
    name: "IMS",
    priority: 20,
    match_field: :apn,
    match_regex: "^ims",
    upf_pool: [
      %{remote_ip_address: "10.179.1.42", remote_port: 8805,
weight: 50},
      %{remote_ip_address: "10.179.1.45", remote_port: 8805,
weight: 50}
    ],
    upf_assigns_ip: true   # UPF □□ UE IP□CHV4□□□□ UPF □
  }
]
```

□□□□□□□□□ **DNS** □□□□□□□

```
rules: [
  %{
    name: "Enterprise Traffic",
    priority: 15,
    match_field: :apn,
    match_regex: "^(enterprise|corporate)\.apn",
    upf_pool: [
      %{remote_ip_address: "10.100.3.21", remote_port: 8805,
weight: 100}
    ],
    # □□□□□□□□□ DNS □□□□ MTU
    pco: %{
      primary_dns_server_address: "192.168.1.10",
      secondary_dns_server_address: "192.168.1.11",
      ipv4_link_mtu_size: 1500
      # P-CSCF□NBNS □□□□ PCO □□□□□□□□
    }
  }
]
```

□□□□□□□□□□□ **PCO** □□□□

```
rules: [
  %{
    name: "IoT APN - Fully Custom",
    priority: 10,
    match_field: :apn,
    match_regex: "^iot\.m2m",
    upf_pool: [
      %{remote_ip_address: "10.100.5.21", remote_port: 8805,
weight: 100}
    ],
    # IoT □□□□□□□□□□□ PCO
    pco: %{
      primary_dns_server_address: "8.8.8.8",
      secondary_dns_server_address: "8.8.4.4",
      primary_nbns_server_address: "10.0.0.100",
      secondary_nbns_server_address: "10.0.0.101",
      p_cscf_ipv4_address_list: [],  # IoT □ P-CSCF
      ipv4_link_mtu_size: 1280       # □□□□□□□□□□ MTU
    }
  }
]
```

□□□

- **IMS/VoLTE**□□□□□□□□□□□□□□□ P-CSCF □□□
- □□ **APNs**□□□□□ DNS □□□□□□□□□
- **IoT/M2M**□□□□□ DNS □□□□ MTU □□□□□□□□
- □□□□□□□□□□□□ DNS □□□
- □□□□□□□□□□□□□□□□□□□□

□□ **DNS □ UPF** □□□

□□□□□□□□□□□ULI□□□□ UPF □□□□□ DNS NAPTR □□□DNS □□□□□ `upf_selection` □□□ □□□

□□□ □□□□□□□□□□□ UPF □□□□□□□□□□□ UPF □□ PFCP □□□□□□□□□□□ PFCP □□ □ □□□□ □□□□□□□□□□

```
upf_selection: %{
  # □□□□□ DNS □□□□
  dns_enabled: true,

  # □□□□□□□□□□□□□□□□
  dns_query_priority: [:ecgi, :tai, :rai, :sai, :cgi],

  # 3GPP NAPTR □□□□ DNS □□
  dns_suffix: "epc.3gppnetwork.org",

  # DNS □□□□□□□□□□
  dns_timeout_ms: 5000,

  # ... □□□□ fallback_pool ...
}
```

□□ DNS □□□□□□□□□

1. □□□□□□□ □□□□□□□□□□□□□□□□□□□□□□□□ DNS □□
2. □□□□□□□□ UE □□□□□ DNS NAPTR □□□□
   - ECGI □□□`eci-<hex>.ecgi.epc.mnc<MNC>.mcc<MCC>.epc.3gppnetwork.org`
   - TAI ���□□`tac-lb<hex>.tac-hb<hex>.tac.epc.mnc<MNC>.mcc<MCC>.epc.3gppnetwork.org`
   - RAI□SAI□CGI □□□□□□□□ 3GPP TS 23.003 □□
3. □□□□□□□□□□□□□□□□□□□□□□□□□□□□□□□□
4. □□□□□□DNS □□□□□□□□□□□□□□□□□□□□
5. □□□

□□ **DNS** □□□□□□□ DNS □□□□□□□□□

```
; NAPTR □□□□□ PLMN 001-001 □□ TAC 100
tac-lb64.tac-hb00.tac.epc.mnc001.mcc001.epc.3gppnetwork.org IN
NAPTR 10 50 "a" "x-3gpp-upf:x-sxb" "" upf-edge-1.example.com.

; UPF □ A □□
upf-edge-1.example.com IN A 10.100.1.21
```

□□□

- □□□□□□□□□**MEC**□□□□□□□□□□□□□□□□□ UPF
- □□ **UPF** □□□□□□/□□ UPF □□□□□□□□ PGW-C
- □□□□□□□□□□□ UPF □□□□□□□
- □□□□□□□□□□□□□□□□□□□□□□□□□□□ UPF

UPF □□□□

□□□□□□□□□□PGW-C □□□□□□□ UPF □□□□□□□□□□□□□□□□ UPF □□□□□□□□□

□□□□□□□

□□□□□□□□□□□□□UPF □□□ □□□

1. **PFCP** □□□□□UPF □□□ PFCP □□
2. □□□□□□□□□ 3 □□□□□□□□□□
3. □□□□□UPF □□□ GenServer □□□□□□

□□□□□□□□□□□□□ UPF □□□ □□□□

- PFCP □□□□□□`associated: false`□
- 3 □□□□□□□□□□
- UPF □□□□□□□□□□

□□□□

□□□□□ **UPF**□□ `upf_selection` □□□

- □□□□□□□□□□□□□
- PFCP □□□□□□
- □ 5 □□□□□□□
- `missed_heartbeats_consecutive` □□□□□□□□□
- □□□□□□□□□□□ UPF □□□□□

□□ **DNS** □□□ **UPF**□□□□□□□

- □□□□□□□□□□□□□□□

- □□□□□□□□□□□□
- □□□□□□□□□□

□□□□

□□/□□□□□□□□ `weight: 0` □□□

1. □□□□□□□ UPF
2. □□ □□□□□□ > 0□□ □□□□□□ == 0□
3. □□□□□□□□□ UPF□□□□□□□ UPF
4. □□□□□□□ UPF □□□□□□□□□□□ UPF□□□□□□ 1□
5. □□□□□□□□ UPF□□□□□□□□□□

□□□□□□□□□□□□□ > 0□□

1. □□□□□□□ UPF
2. □□□□□ UPF □□□□□□□□□□
3. □□□□□□□□ UPF□□□□□□□□□□

□□□□□□

```
[debug] □□□□□ UPF □□2/3 □□ UPF□1 □□□□
[info] □□□□□ UPF □□□□□□□□□□ UPF□1 □□ UPF□□□□□ 0 □□ 1□
[warning] □□□□□□□□□ UPF□□ 3 □□□□□□□□□□□□□□□
```

□□ **UPF** □□

□□□□□□□

```
# □□□□□ UPF □□□□□
iex> PGW_C.PFCP_Node.is_peer_healthy?({10, 100, 1, 21})
true

# □□□□□□□□□□□
iex> PGW_C.PFCP_Node.get_peer_health({10, 100, 1, 21})
%{
  associated: true,
  missed_heartbeats: 0,
  healthy: true,
  registered: true
}
```

□□ OAM API□

- □□ `/api/upf_selection` □□□`curl -k https://localhost:8443/api/upf_selection`
- □□□□□□□□□ UPF □□□□□□□□
- □□□□Active-UP□Standby-Ready□Active-DOWN□Not Associated
- □□□□ACTIVE□□□ > 0□□STANDBY□□□ == 0□□DYNAMIC□DNS □□□□□□□□□□
- □□□□□ UPF □□□□□□□□□

□□□□□□□□

1. □ **upf_selection** □□□ **UPF**□□□□□□□□□□□□ UPF □□□□□

```
upf_selection: %{
  rules: [
    %{
      name: "Internet Traffic",
      priority: 10,
      match_field: :apn,
      match_regex: "^internet",
      upf_pool: [
        %{remote_ip_address: "10.100.1.21", remote_port: 8805,
weight: 100}
      ]
    }
  ],
  fallback_pool: [
    %{remote_ip_address: "10.100.2.21", remote_port: 8805,
weight: 100}
  ]
}
# □□ UPF □□□□□
# - 5 □□□
# - □□□□□□□□□
# - □□□□□□□□
```

2. □□□□ **UPF**□□□□□□□□□□ 0 □□□□□□□□□□

```
upf_pool: [
  %{remote_ip_address: "10.1.1.1", remote_port: 8805, weight:
100},  # □□
  %{remote_ip_address: "10.1.1.2", remote_port: 8805, weight:
0}     # □□
]
```

3. □□ **OAM API** □□□□□□□ `/api/upf_selection` □□□□□ UPF □□□□

4. □□□□□□□□□ 3 □□□□□□□□□□□□□□□□□□□□□□□□

□□ UPF □□

□□□PGW-C □□□□□□□□□ DNS □□□ UPF□□□□□□□ `upf_selection` □□□□

□□□□

□□□□□□□□□□□□□□□□□ DNS□□□□□□□□□□□ UPF □□□□□□□□□

1. □□ **PFCP** □□□□□□□ UPF □□□□□□□□□
2. □□ **PFCP** □□□□□□□ UPF □□ PFCP □□
3. □□□□□□□□□□□ UPF □□□□□□□□□□□□□
4. □□□□□□□□□□□□□□□□□□□10 □□□□
5. □□□□□□□□□□ UPF □□□□□□□

□□ **UPF** □□□□□

□ UPF □□□□□□□□□□□□□□□□□□□□□

```
%{
  name: "Dynamic-UPF-<IP>",              # □□ "Dynamic-UPF-10-100-
1-21"
  remote_ip_address: <discovered_ip>,     # □ DNS □□□□□□□□ IP
  remote_port: 8805,                      # □□ PFCP □□□□□□□□
  initiate_pfcp_association_setup: true,  # PGW-C □□□□
  heartbeat_period_ms: 10_000             # 10 □□□□□
}
```

> □□□□□ UPF □□□□□□□□□□□□ `upf_selection` □□□□□□□□□□□□□□□□□□□□□□□□□□□□□

□□□**DNS** □□□□ **UPF**

```
# DNS □□□□□upf-edge-2.example.com -> 10.200.5.99
# □ UPF □□□□ upf_selection □□□

# □□□□□□□□
# 1. □□□□□□□□ UPF 10.200.5.99
# 2. □□□“UPF {10, 200, 5, 99} □□□□□□□□□□□□...”
# 3. □ 10.200.5.99:8805 □□ PFCP □□□□□□
# 4. □□ UPF □□□□□□□□□□□□□□□□
# 5. □□ UPF □□□□□□□□□□□□□□□□□□□□□□□□
```

□□

□ □□□□□□□□□□□□ DNS □ UPF □□□□□□□□□□□□□□□
□ □□□□□□□ UPF □□□□□□□□□□□□□□□ PGW-C
□ □□□□□□□□□□□□□□□□□□□□□□□□□□□□□□□□
□ □□□□□□□□□□□ UPF □□□□□□□□
□ □□□□□□□□ UPF □□□□□□□□□□□□□□□□

□□□□

□□□□□□□□ UPF □□□□□ PFCP □□□□□□

```
[error] PFCP □□□□□□□□□□□ UPF {10, 200, 5, 99}□:timeout
[error] □□□□□ UPF {10, 200, 5, 99} □□□□:timeout□
        □□□□□□□□□□□□□□□ UPF □□□□ upf_selection □□□□□
```

□□□□□□□□□□ PGW-C □□□□□□□□□□□□□□□□□

□□□□□□□□□□□□

□□	□□
□□□□□ **UPF**	□ `upf_selection` □□□□□□□□□□□□□□□□□□□□□□
DNS □□□□□□ **UPF**	□□□□□□□□□□□□□□□□□□□□□□
□□/□□ **UPF**	□□□□□□□□□□□□□□□□
□□□□□ **UPF**	□ `upf_selection` □□□□□□□□□□□□□□□□□□□
□□/□□□□ **UPF**	□□□□□□□□□UPF □□□□□□□□□□

□□□□□ **UPF**

□□ UPF □□□□□□□□□□□□□□□□□□□□□□

```
[info] □□□□ PFCP □□□□□□□□□□-UPF-10-200-5-99 ({10, 200, 5, 99}:8805)
[info] □□ UPF □□□□□-UPF-10-200-5-99 □□□□□□PID #PID<0.1234.0>
```

□□□□□□□□□□□□□□□□□□□□□□□□□□□□□□□□□□□□

```
# □□□□□□□□□□□
PGW_C.PFCP_Node.registered_peer_count()

# □□□□□ UPF □□□□□□
PGW_C.PFCP_Node.get_peer({10, 200, 5, 99})
# □□□{:ok, #PID<0.1234.0>} □□□□□□□□□□□ :error
```

□□ **UPF** □□□□□□□

□□□□ UPF □□□□□□ PFCP □□□□□□□□□□□□□□□

```
# □□□□□□□□□□ UPF
PGW_C.PFCP_Node.register_dynamic_peer({10, 200, 5, 99}, 9999)
```

□□□□□□ DNS □□□□□□□□□□□□□□□□ 8805□□□ PFCP □□□□

UPF □□□□□□□□□

□□□□□□□□ UPF □□□□□□□□□□□□□□□□□

```
config :pgw_c,
  # □□□□□□□□□□□□□□□□□□□□□□
  upf_selection_dry_run: true
```

□□□□□□□□□□□

1. □□□□□□□□□□□□□□□□□□□□ UPF
2. □□□□□□□□□□□□□□□□□□□□□□
3. □□□□□□`assign_sxb_peer/1` □□ `{:error, :dry_run_mode}`
4. □□□□□□□□□□□□□□□□□□□□
5. □□□□□□□□□□□□□□□□□□□□□ DNS □□□

□□□□□□□□

```
[warning] ⚠  UPF □□□□□□□□□□□□ - □□□□□□□□□□

[info] □ □□□□□□□□□□□□
  □□□□□□□□
  □□□□□□:apn
  □□□□□□~r/^internet\./
  □□□□□10
  □□□ UPF□10.0.1.21:8805

[warning] □ □□□□□□□□ UPF□□□□□□□□□
  □□ IMSI□001001000000670
  □□ APN□internet.apn
  □□□□□□□□
  □□□□□□10.0.1.21:8805
  ⚠  □□□□□□□□□□□□□
```

□□ LiveView UI □□□

UPF □□ LiveView □□ (`/api/upf_selection`) □□□□□□□□□□

1. □ Web □□□□□□ UPF □□□□
2. □□□“□□ UPF □□”□□
3. □□□□□□□□□□
   - IMSI□□□□`001001000000670`□
   - APN□□□□`internet.apn`□
   - □□□□ PLMN ID□□□□`001001`□
4. □□“□□□□”□□□□□
5. □□□□□□□□□□□
   - □□□□□□□□□□□□□ DNS□
   - □□□ UPF □□□□□
   - □□□□□□□□□□□□
   - □□□□□

LiveView □□□□□□□□□□ □□□□□□□□□□□□□

- □□□□□□□□□□□□□□□□□□□□ UPF
- □□□□□□□□□□ UPF □□□□
- □□□□□□□□□□□□□□□□□

□□□□□

- `:imsi` - □□□□□□□□
- `:apn` - □□□□□□APN/DNN□
- `:serving_network_plmn_id` - □□□□ PLMN ID
- `:sgw_ip_address` - SGW IP □□
- `:uli_tai_plmn_id` - □□□□ PLMN ID
- `:uli_ecgi_plmn_id` - E-UTRAN □□ PLMN ID

□□□□□

```
# □□□□□□□□□□□
heartbeat_period_ms: 2_000  # 2 □

# □□□□□□□
heartbeat_period_ms: 5_000  # 5 □

# □□□□□□□□□□
heartbeat_period_ms: 10_000  # 10 □
```

□□□ PFCP □□□□

UE IP □□□

□□

□□□□ UE □□□ IP □□□□□ APN □□□

□□□

```
config :pgw_c,
  ue: %{
    subnet_map: %{
      # APN "internet" □
      "internet" => [
        "100.64.0.0/20"  # 4094 □□ IP
      ],

      # APN "ims" □
      "ims" => [
        "100.64.16.0/22"  # 1022 □□ IP
      ],

      # □□□□□□□□ APN
      default: [
        "42.42.42.0/24"  # 254 □□ IP
      ]
    }
  }
```

□□

□□	□□	□□	□□
`subnet_map`	Map	□	□ APN □□□□□□□□□□
`default`	List (□□)	□	□□□□ APN □□□□

□□□□

CIDR □□□□ `<network_address>/<prefix_length>`

□□ **IP □□□**

CIDR	□ IP □	□□ IP □	□□□□
/24	256	254	100.64.1.1 - 100.64.1.254
/23	512	510	100.64.0.1 - 100.64.1.254
/22	1024	1022	100.64.0.1 - 100.64.3.254
/21	2048	2046	100.64.0.1 - 100.64.7.254
/20	4096	4094	100.64.0.1 - 100.64.15.254
/16	65536	65534	100.64.0.1 - 100.64.255.254

□□

□□□□□

```
ue: %{
  subnet_map: %{
    "internet" => ["100.64.1.0/24"],
    default: ["42.42.42.0/24"]
  }
}
```

□□□□□

```
ue: %{
  subnet_map: %{
    # □□□□□□ - □□
    "internet" => [
      "100.64.0.0/18"  # 16,382 IP
    ],

    # IMS (VoLTE)
    "ims" => [
      "100.64.64.0/22"  # 1,022 IP
    ],

    # □□ APN
    "enterprise.corp" => [
      "10.100.0.0/16"  # 65,534 IP
    ],

    # IoT □□
    "iot.m2m" => [
      "100.64.72.0/20"  # 4,094 IP
    ],

    # □□□□□
    default: [
      "42.42.42.0/24"  # 254 IP
    ]
  }
}
```

□□□□□□□□ APN □□□□□□□□

```
ue: %{
  subnet_map: %{
    "internet" => [
      "100.64.0.0/22",   # 1022 IP
      "100.64.4.0/22",   # 1022 IP
      "100.64.8.0/22",   # 1022 IP
      "100.64.12.0/22"   # 1022 IP
    ],
    # □□□4088 IP□□□□□
    default: ["42.42.42.0/24"]
  }
}
```

□□□□□□□□□□

□□□□□ APN □□□□□□ `^` □□□□□□□□□□□□□□□□

```
ue: %{
  subnet_map: %{
    # □□□□ "ims" □□□ APN□□□ "ims"□"ims.apn"□"ims.something"□
    "^ims" => [
      "100.64.10.0/24"
    ],

    # □□□□ "m2m." □□□ APN□□□ "m2m.test"□"m2m.prod"□
    "^m2m\." => [
      "100.64.20.0/24"
    ],

    # □□□□□
    "enterprise.corp" => [
      "10.100.0.0/16"
    ],

    default: ["42.42.42.0/24"]
  }
}
```

□□□□□

- □ `^` □□□□□□□□□□□□□

- □□ `^` □□□□□□□□□□□□□□□
- □□□□□□□□□□□□□□□□□
- □□□□□□□□□□□
- □□□□□□□□□`\` □□ `\`□

□□□□□

- □...□□□ `"^ims"` □□ `ims`□`ims.apn`□`ims.foo.bar`
- □...□□□ `"^.*\.corp$"` □□ `foo.corp`□`bar.corp`
- □□□ `"^.*test.*"` □□ `test`□`foo.test.bar`

IPv6 □□□

```
ue: %{
  subnet_map: %{
    # IPv4 □
    "internet" => [
      "100.64.0.0/20"
    ],

    # IPv6 □□□□□□□
    "internet.ipv6" => [
      "2001:db8:1::/48"
    ],

    default: [
      "42.42.42.0/24"
    ]
  }
}
```

□□□ IP □□

RFC 6598□□□□□ NAT□□

- □□□ `100.64.0.0/10`
- □□□ ~400 □ IP
- □□□ □□□□□□□ NAT □□

□□ **IP □□□RFC 1918□□**

- `10.0.0.0/8` - 1600 □ IP
- `172.16.0.0/12` - 100 □ IP
- `192.168.0.0/16` - 65,534 IP

□□□ UE IP □□□□□

PCO □□

□□

□□□□□ UE □□□□□□□□□PCO□□

□□□

```
config :pgw_c,
  pco: %{
    # DNS □□□
    primary_dns_server_address: "8.8.8.8",
    secondary_dns_server_address: "8.8.4.4",

    # IPv6 DNS □□□□□□□□□□ 0x0003□
    primary_dns_server_ipv6_address: nil,
    secondary_dns_server_ipv6_address: nil,

    # NBNS □□□□□□□□□□ Windows □□□
    primary_nbns_server_address: nil,
    secondary_nbns_server_address: nil,

    # IMS □ P-CSCF □□
    p_cscf_ipv4_address_list: ["10.0.0.50", "10.0.0.51"],   # □□
0x000C
    p_cscf_ipv6_address_list: [],                           # □□
0x0001

    # IPv4 MTU □□
    ipv4_link_mtu_size: 1400
  }
```

□□

□□	□□	□□□	□□
`primary_dns_server_address`	□□□□（IPv4）	□□	□ DNS □□□
`secondary_dns_server_address`	□□□□（IPv4）	□□	□ DNS □□□
`primary_dns_server_ipv6_address`	□□□□（IPv6）	`nil`	□ IPv6 DNS □□□□□□ 0x0003）
`secondary_dns_server_ipv6_address`	□□□□（IPv6）	`nil`	□ IPv6 DNS □□□□□□ 0x0003）
`primary_nbns_server_address`	□□□□（IPv4）	`nil`	□ NBNS（NetBIOS□□□□
`secondary_nbns_server_address`	□□□□（IPv4）	`nil`	□ NBNS □□□
`p_cscf_ipv4_address_list`	□□（IPv4）	`[]`	IMS □ IPv4 P-CSCF □□□□□ 0x000C）
`p_cscf_ipv6_address_list`	□□（IPv6）	`[]`	IMS □ IPv6 P-CSCF □□□□□ 0x0001）
`ipv4_link_mtu_size`	□□	`1400`	□□□□□□□□

□□

□□ **DNS**□□□□□

```
pco: %{
  primary_dns_server_address: "8.8.8.8",
  secondary_dns_server_address: "8.8.4.4",
  ipv4_link_mtu_size: 1400
}
```

□□ DNS□

```
pco: %{
  primary_dns_server_address: "10.0.0.10",
  secondary_dns_server_address: "10.0.0.11",
  ipv4_link_mtu_size: 1400
}
```

IMS □□□

```
pco: %{
  primary_dns_server_address: "10.0.0.10",
  secondary_dns_server_address: "10.0.0.11",

  # IMS/VoLTE □ P-CSCF
  p_cscf_ipv4_address_list: [
    "10.0.0.50",  # □ P-CSCF
    "10.0.0.51"   # □ P-CSCF
  ],

  ipv4_link_mtu_size: 1400
}
```

NBNS□Windows □□□□□

```
pco: %{
  primary_dns_server_address: "10.0.0.10",
  secondary_dns_server_address: "10.0.0.11",
  primary_nbns_server_address: "10.0.0.20",
  secondary_nbns_server_address: "10.0.0.21",
  ipv4_link_mtu_size: 1400
}
```

MTU □□□

```
# □□□□□□
ipv4_link_mtu_size: 1500

# □□□□□□□□
ipv4_link_mtu_size: 1400

# Jumbo □□□□□□□□
ipv4_link_mtu_size: 9000
```

□□□ PCO □□□□

OAM API □□

□□

□□□□□□□□□□ OmniPGW □ OAM REST API □□□□□□□□□□□□□□□□ API □□□

> □□□ API □□□□□□□□□□□□□□□□ `config_env()` □ `:test`□`:test_mock` □ `:test_impl` □□□□□□□□□□□

REST API □□

```
config :api_ex,
  api: %{
    # □□□□
    port: 8443,
    listen_ip: "0.0.0.0",

    # API □□□
    product_name: "PGW-C",
    title: "API - PGW-C",
    hostname: "localhost",

    # TLS □□
    enable_tls: true,
    tls_cert_path: "priv/cert/omnitouch.crt",
    tls_key_path: "priv/cert/omnitouch.pem",

    # □□□□
    routes: [
      %{
        path: "/status",
        module: ApiEx.Api.StatusController,
        actions: [:index]
      }
    ]
  }
```

API □□

□□	□□	□□□	□□
`port`	□□	`8443`	REST API □ HTTPS □□
`listen_ip`	□□□□IP□	`"0.0.0.0"`	API □□□□□0.0.0.0 = □□□□□
`product_name`	□□□	`"PGW-C"`	□□□□□□□ API □□□□
`title`	□□□	`"API - PGW-C"`	API □□□□
`hostname`	□□□	`"localhost"`	API □□□□□□
`enable_tls`	□□□	`true`	□□ API □ HTTPS
`tls_cert_path`	□□□□□□□	□□	SSL/TLS □□□□□□
`tls_key_path`	□□□□□□□	□□	SSL/TLS □□□□□□
`routes`	□□□□□□	`[]`	API □□□□

□□□□□□

`routes` □□□□□□□□□□□□□□□□□□□□□□□□□□□□

□□	□□	□□	□□
`path`	□□□	□□□ URL □□	`"/status"`
`module`	□□	□□□□□□□□□□□	`ApiEx.Api.StatusController`
`actions`	□□□□□□	□□□□□□□□□	`[:index, :show]`

□□

□□□□□□□□□□

```
# API □ localhost:8443
config :api_ex,
  api: %{
    port: 8443,
    listen_ip: "127.0.0.1",  # □□□□□□
    hostname: "localhost",
    enable_tls: true,
    tls_cert_path: "priv/cert/dev-cert.crt",
    tls_key_path: "priv/cert/dev-key.pem",
    routes: [
      %{path: "/status", module: ApiEx.Api.StatusController,
actions: [:index]}
    ]
  }
```

□□□□□

```
# API □□□□□
config :api_ex,
  api: %{
    port: 8443,
    listen_ip: "10.0.0.20",  # □□□□
    product_name: "OmniPGW-C",
    hostname: "pgw-c-api.example.com",
    enable_tls: true,
    tls_cert_path: "/etc/ssl/certs/pgw-c-api.crt",
    tls_key_path: "/etc/ssl/private/pgw-c-api.key",
    routes: [
      %{path: "/status", module: ApiEx.Api.StatusController,
actions: [:index]},
      %{path: "/sessions", module: ApiEx.Api.SessionController,
actions: [:index, :show]}
    ]
  }
```

□□ API

□□□□□

```
# □□□□□□□□□□□□□□□□
curl -k https://localhost:8443/api/status

# □□□□□□□□□□□□□
curl https://pgw-c-api.example.com:8443/api/status
```

□□□□□□ `/api` □□□□□□□□□□□□□□
`/api/status`□`/api/sessions`□`/api/upf`□`/api/diameter`□`/api/charging`□`/api/ip_pools`□`/api/session_history`□`/api/topology`□`/api/ue_search`□POST□□`/api/pcscf_monitor` □ `/api/upf_selection`□

□□□ **API** □□□**Swagger UI**□□

```
https://localhost:8443/api/docs
```

TLS □□□

□□□□□□□□□□□□

```
# □□□□□□□
openssl req -x509 -newkey rsa:4096 -keyout priv/cert/omnitouch.pem
\
  -out priv/cert/omnitouch.crt -days 365 -nodes \
  -subj "/CN=localhost"
```

□□□□□

□□□□□□□□□□□□□□□□□□□□□□□□□□CA□□□□□□□

- Let's Encrypt□□□□□□□□
- □□ CA□DigiCert□GlobalSign □□
- □□□□□□□ CA

□□□□

1. □□□□□□□□□ **TLS** - □□ `enable_tls: true`
2. □□ **listen_ip** - □□□□□□□□□□ IP □□□□□□□ 0.0.0.0□
3. □□□□□□□□ - □□□□□□□□□□□□□□□□
4. □□□□□□ - □□□□□□□□□8443□□□□
5. □□□□□□ - □□ 4096 □ RSA □□□
6. □□□□ - □□□□□□□□□□□

□□□□

□□□□□□□□ **API**

```
# □□□□□□□□□□
netstat -tulpn | grep 8443

# □□□□□□□□□□□
ls -la priv/cert/

# □□□□□□□□□□□□
tail -f /var/log/pgw_c/application.log
```

□□□**SSL/TLS** □□

- □□□□□□□□□□□□□□□
- □□□□□□□□□□□
- □□□□□□□□`openssl x509 -in cert.crt -text -noout`
- □□□□□□□□□□□□□□ PGW-C □□□□□

□□□ □□□□ □□□ OAM API □□□□□□

□□□□

□□□□□□

```
# config/runtime.exs
import Config

# □□□□
config :logger, level: :info

config :pgw_c,
  # □□□Prometheus□
  metrics: %{
    enabled: true,
    ip_address: "10.0.0.20",  # □□□□
    port: 9090,
    registry_poll_period_ms: 5_000
  },

  # Diameter/Gx□PCRF □□□
  diameter: %{
    listen_ip: "0.0.0.0",
    host: "omnipgw.epc.mnc001.mcc001.3gppnetwork.org",
    realm: "epc.mnc001.mcc001.3gppnetwork.org",
    peer_list: [
      %{
        host: "pcrf-primary.epc.mnc001.mcc001.3gppnetwork.org",
        realm: "epc.mnc001.mcc001.3gppnetwork.org",
        ip: "10.0.1.30",
        initiate_connection: true
      },
      %{
        host: "pcrf-backup.epc.mnc001.mcc001.3gppnetwork.org",
        realm: "epc.mnc001.mcc001.3gppnetwork.org",
        ip: "10.0.2.30",
        initiate_connection: true
      }
    ]
  },

  # S5/S8□SGW-C □□□
  s5s8: %{
```

```
    local_ipv4_address: "10.0.0.20"
  },

  # Sxb/PFCP□PGW-U □□□
  sxb: %{
    local_ip_address: "10.0.0.20"
  },

  # UPF □□
  upf_selection: %{
    rules: [
      %{
        name: "□□□□□",
        priority: 1,
        match_field: :apn,
        match_regex: ~r/^internet/,
        upf_pool: [
          %{remote_ip_address: "10.0.0.21", remote_port: 8805,
weight: 100},
          %{remote_ip_address: "10.0.0.22", remote_port: 8805,
weight: 0}  # □□
        ]
      }
    ],
    fallback_pool: [
      %{remote_ip_address: "10.0.0.21", remote_port: 8805, weight:
100}
    ]
  },

  # UE IP □
  ue: %{
    subnet_map: %{
      "internet" => [
        "100.64.0.0/18"  # 16,382 IP
      ],
      "ims" => [
        "100.64.64.0/22"  # 1,022 IP
      ],
      "enterprise.corp" => [
        "10.100.0.0/16"  # 65,534 IP
      ],
      default: [
        "100.64.127.0/24"  # 254 IP
```

```
      ]
    }
  },

  # □□□□□□
  pco: %{
    primary_dns_server_address: "8.8.8.8",
    secondary_dns_server_address: "8.8.4.4",
    p_cscf_ipv4_address_list: ["10.0.0.50", "10.0.0.51"],
    ipv4_link_mtu_size: 1400
  }
```

□□□□

□□□□

OmniPGW □□□□□□□□□□□□□□□□

```
[info] □ runtime.exs □□□□
[info] □□□□...
[info] □□□□
[info] □□ OmniPGW...
```

□□□□□□

□□□ **IP** □□□

```
[error] s5s8.local_ipv4_address □□□□ IP □□□"10.0.0"
```

□□□□□□□□

```
[error] □□□□□□□□sxb.local_ip_address
```

□□□ **CIDR**□

```
[error] ue.subnet_map □□□□□□□□"100.64.1.0/33"
```

□□□ Diameter □□□

```
[error] Diameter □□□□□□ FQDN□□□□□ IP□"10.0.0.20"
```

□□□□

□□□□□□□□□□

```
# □□□□□
mix compile

# □□□□□□□
iex -S mix
iex> Application.get_env(:pgw_c, :metrics)
```

□□□□□□

□□

```
# config/dev.exs
import Config

config :logger, level: :debug

config :pgw_c,
  metrics: %{
    enabled: true,
    ip_address: "127.0.0.1",
    port: 42069,
    registry_poll_period_ms: 10_000
  },
  diameter: %{
    listen_ip: "0.0.0.0",
    host: "omnipgw-dev.local",
    realm: "local",
    peer_list: [
      %{
        host: "pcrf-dev.local",
        realm: "local",
        ip: "127.0.0.1",
        initiate_connection: true
      }
    ]
  },
  s5s8: %{
    local_ipv4_address: "127.0.0.10"
  },
  sxb: %{
    local_ip_address: "127.0.0.20"
  },
  upf_selection: %{
    fallback_pool: [
      %{remote_ip_address: "127.0.0.21", remote_port: 8805,
weight: 100}
    ]
  },
  ue: %{
```

```
    subnet_map: %{
      "internet" => ["100.64.1.0/24"],
      default: ["42.42.42.0/24"]
    }
  },
  pco: %{
    primary_dns_server_address: "8.8.8.8",
    secondary_dns_server_address: "8.8.4.4",
    ipv4_link_mtu_size: 1400
  }
```

□□□□□□

```
# config/runtime.exs
import Config

config :pgw_c,
  metrics: %{
    enabled: System.get_env("METRICS_ENABLED", "true") == "true",
    ip_address: System.get_env("METRICS_IP", "0.0.0.0"),
    port: String.to_integer(System.get_env("METRICS_PORT",
"9090")),
    registry_poll_period_ms: 10_000
  },
  diameter: %{
    listen_ip: System.get_env("DIAMETER_LISTEN_IP", "0.0.0.0"),
    host: System.get_env("DIAMETER_HOST") || raise("DIAMETER_HOST
required"),
    realm: System.get_env("DIAMETER_REALM") ||
raise("DIAMETER_REALM required"),
    peer_list: [
      %{
        host: System.get_env("PCRF_HOST") || raise("PCRF_HOST
required"),
        realm: System.get_env("PCRF_REALM") ||
System.get_env("DIAMETER_REALM"),
        ip: System.get_env("PCRF_IP") || raise("PCRF_IP
required"),
        initiate_connection: true
      }
    ]
  }
  # ... □□□□
```

□□□

```
export DIAMETER_HOST="omnipgw.epc.mnc001.mcc001.3gppnetwork.org"
export DIAMETER_REALM="epc.mnc001.mcc001.3gppnetwork.org"
export PCRF_HOST="pcrf.epc.mnc001.mcc001.3gppnetwork.org"
export PCRF_IP="10.0.0.30"

mix run --no-halt
```

□□□□

□□□□

- **PFCP □□** - Sxb/PFCP □□□UPF □□□□□□□
- **Diameter Gx □□** - PCRF □□□□□PCC □□□QoS □□
- **Diameter Gy □□** - OCS □□□□□□□□□□□□□□□
- **S5/S8 □□** - GTP-C v2 □□□SGW-C □□□4G/LTE□
- **Gn/Gp □□** - GTP-C v1 □□□SGSN □□□2G/3G GGSN□

□□□□

- **UE IP □□** - IP □□□□□□ APN □□□□DHCP
- **PCO □□** - □□□□□□□DNS□P-CSCF□MTU
- **P-CSCF □□** - P-CSCF □□□□□IMS □□□□

□□□□

- □□□□ - PDN □□□□□□□□□□□
- □□□□ - Prometheus □□□□□□□□□
- □□ **CDR □□** - □□□□□□□□□□□

□□□□□□

OmniPGW □□□□ - *□ Omnitouch □□□□□□*

□□□□□□□□ (CDR) □□

PGW-C □□□□□

OmniPGW □ Omnitouch □□□□□□

□□

1. □□
2. CDR □□□□
3. CDR □□
4. CDR □□
5. □□□□
6. □□
7. CDR □□□□
8. □□□□□□
9. □□
10. □□

□□

□□ **CDR**□□□□□□□□ □□□□□□□□□□□□□□□PGW-C□□□□□□□□□□CDR □□□□□□□□□□□□□□□

- □□□□ - □□□□□□□□□□□□□□□□
- □□ **3GPP** □□ - □□ 3GPP TS 32.251□PS □□□□□ TS 32.298□CDR □□□

□□

□□	□□
□□□□	□□□□□□□□ CDR
□□	□□□□□□□□
□□□□	□□□□□□□□□□
□□□□	□□□□□□□□□
□□□□	□□□□□□□□□

CDR □□□□

□□□□□□

```
<epoch_timestamp>
```

□□:

```
1726598022
```

□□□□□□□□□□ Unix □□□□□□□□□□□□□

□□□□

□□□□:

- PGW-C: `/var/log/pgw_c/cdrs/`

□□□ `cdr_directory` □□□ config/runtime.exs □□□□

□□□

□□ CDR □□□□□□□□□□□□□□□□□

```
# □□ CDR □□:
# □□□□□□□: HH:MM:SS (unix_timestamp)
# □□□□□□□: HH:MM:SS (unix_timestamp)
# □□□□: <gateway_name>
#
epoch,imsi,event,charging_id,msisdn,ue_imei,timezone_raw,plmn,tac,eci
```

□□□:

- □□□□□□ - CDR □□□□□□□□□□ Unix □□□□
- □□□□□□ - □□□□□□□□□□□□□ Unix □□□□
- □□□□ - PGW-C □□□□□□□□□ `pgw_name` □□□□□
- □□ - □□□□□ CSV □□□□

CDR □□

□□□□

□□	□□□□	□□	□□
0	epoch	□□	□□□□□□Unix □□□□
1	imsi	□□□	□□□□□□□□
2	event	□□□	CDR □□□□□□□□“default_bearer_start”□
3	charging_id	□□	□□□□□□□□□□
4	msisdn	□□□	□□□ ISDN □□□□□□□□
5	ue_imei	□□□	□□□□□□□□
6	timezone_raw	□□□	UE □□□□□□□□□□□
7	plmn	□□	□□□□□□□□□□□
8	tac	□□	□□□□□□
9	eci	□□	E-UTRAN □□□□□
10	sgw_ip	□□□	SGW-C S5/S8 □□□□ IP □□
11	ue_ip	□□□	UE IP □□□IPv4|IPv6 □□□
12	pgw_ip	□□□	PGW-C S5/S8 □□□□ IP □□
13	apn	□□□	□□□□□
14	qci	□□	QoS □□□□

□□	□□□□	□□	□□
15	octets_in	□□	□□□□□□□□□□
16	octets_out	□□	□□□□□□□□□□

CDR □□

□□□□

CDR □□□□□□□□□□□□

□□□□	□□	□□	□□□□
□□□□	`<type>_bearer_start`	□□□□	□□□□□□□□
□□□□	`<type>_bearer_update`	□□□□□□□□	□□□□□□□□□□□□□□□
□□□□	`<type>_bearer_end`	□□□□	□□□□□□/□□

□□□□:

- `default` - □□□□□□□ PDN □□□□□
- `dedicated` - □□□□□□□ PDN □□□□□□□□

□□□□

```
default_bearer_start      - □□□□□□□
default_bearer_update     - □□□□□□□□
default_bearer_end        - □□□□□□□
dedicated_bearer_start    - □□□□□□□
dedicated_bearer_update   - □□□□□□□□
dedicated_bearer_end      - □□□□□□□
```

□□□□

□□ CDR □□

```
# □□ CDR □□:
# □□□□□□: 18:53:42 (1726598022)
# □□□□□□: 19:53:42 (1726601622)
# □□□□: sgw-c-prod-01
# epoch,imsi,event,charging_id,msisdn,ue_imei,timezone_raw,plmn,tac,e
1726598022,310260123456789,default_bearer_start,12345,15551234567,123
1726598322,310260123456789,default_bearer_update,12345,15551234567,12
1726598622,310260123456789,default_bearer_update,12345,15551234567,12
1726598922,310260123456789,default_bearer_end,12345,15551234567,12345
```

□□□□

CDR □□□□□□□□□□□□□□□□□□□□

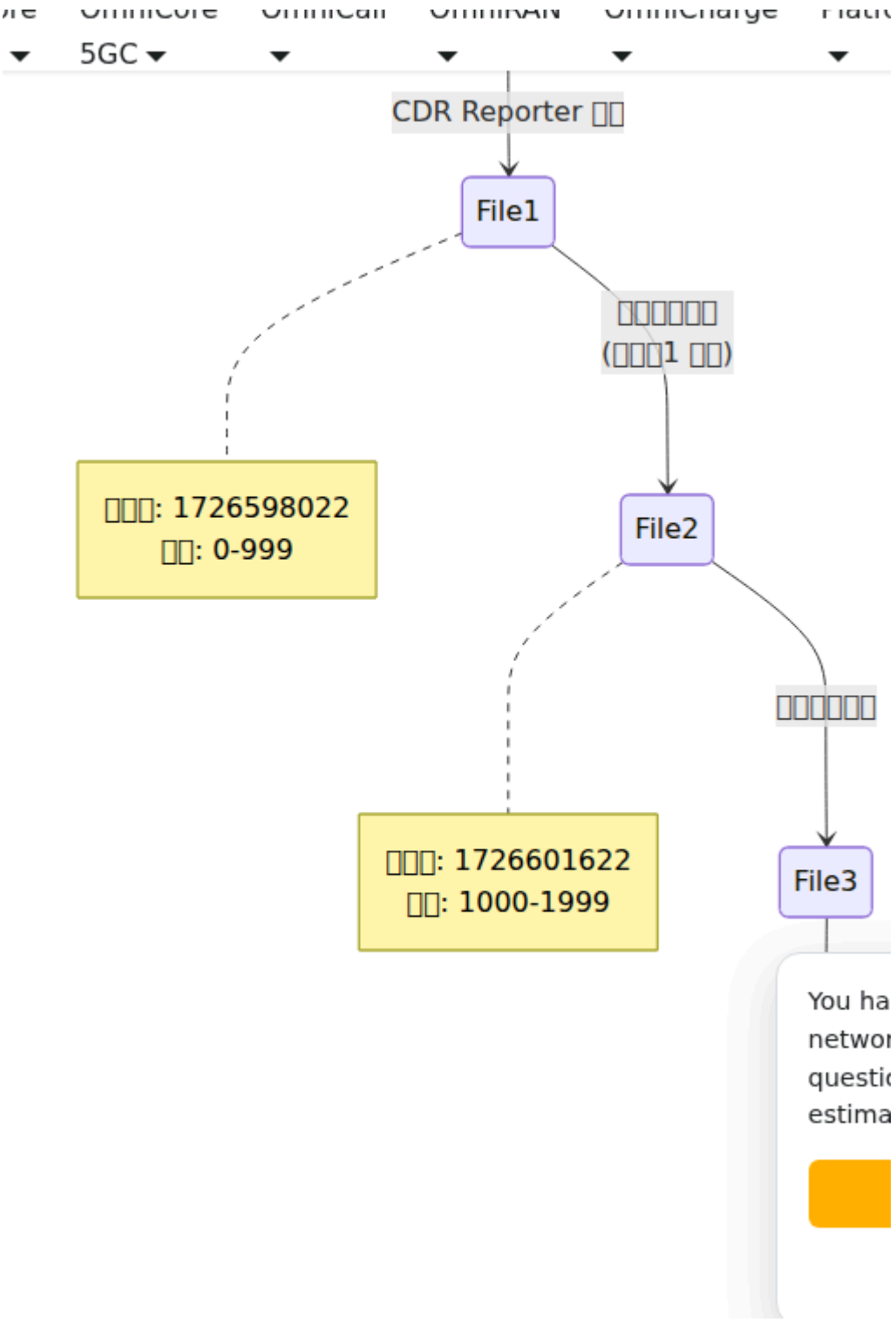
5GC
CDR Reporter □□
File1
□□□□□□□
(□□□1 □□)
□□□: 1726598022
□□: 0-999
File2
□□□□□□□
□□□: 1726601622
□□: 1000-1999
File3

□□□□:

1. □□□□ CDR □□
2. □□□□□□□□□□□□□□□
3. □□□□□□□□
4. □□□ CDR □□□□□□□□

□□

□□□□

PGW-C CDR □□□ `config/runtime.exs` □□□□

□□	□□	□□	□□□	□□□
`pgw_name`	□□□	PGW □□□□□ □□□□ CDR ��□□	"omni-pgw01"	□□□□□□□□ ID
`cdr_file_duration`	□□	□□□□□ □□□□□	3600000	3600000□1 □□□
`cdr_directory`	□□□	CDR □□□□□ □	"/tmp/pgw_c"	`/var/log/pgw_c/cdr`
`usage_report_interval`	□□	URR □ □□□□□ □□ - PGW-U □□□ □□□□□ □	60000	60000□1 □□□

□□□□

□□□□ (config/runtime.exs):

```
config :pgw_c,
  # CDR □□□□
  pgw_name: "omni-pgw01",
  cdr_file_duration: 3_600_000,           # 1 □□
  cdr_directory: "/var/log/pgw_c/cdrs",

  # URR □□□□□□ PGW-U □□□□□□□
  usage_report_interval: 60_000           # 60 □
```

□□□□:

```
config :pgw_c,
  pgw_name: "pgw-c-prod-01",
  cdr_file_duration: 3_600_000,           # 1 □□□□
  cdr_directory: "/var/log/pgw_c/cdrs",
  usage_report_interval: 60_000           # 1 □□□□
```

□□□□:

```
config :pgw_c,
  pgw_name: "pgw-c-dev",
  cdr_file_duration: 300_000,             # □□□□ 5 □□□□
  cdr_directory: "/tmp/pgw_c_cdrs",
  usage_report_interval: 30_000           # □□□□□ 30 □□□
```

□□□:

```
config :pgw_c,
  pgw_name: "pgw-c-prod-heavy",
  cdr_file_duration: 1_800_000,           # 30 □□□□
  cdr_directory: "/mnt/fast-storage/cdrs",
  usage_report_interval: 300_000          # 5 □□□□□□□□□□□
```

URR□□□□□□□□

PGW-C □□ **PFCP URR**□□□□□□□□ □□□ PGW-U □□□□□□□□□ URR □□□□□□□□□PGW-U □□□□□□□□□□□□□□□□□□□□□□□□ CDR □□□

URR □□□□□□□:

1. `usage_report_interval`□□□□□□□□□□□ PFCP □□□□□□□
2. PGW-C □□□□□□□□□□□□□□□□□ URR
3. PGW-U □□□□□□□□□□□□□□□□
4. □□□□□□□□□□ `bearer_update` CDR □□
5. □□□□□□□□□□□□□□□□□ `bearer_end` CDR □□

□□: `usage_report_interval: 60_000` □□□□

- PGW-U □ 60 □□□□□□□□□
- □ 60 □□□ CDR □□□□
- □□□□□□□□□□□□□

URR □□□□:

```
defmodule PGW_C.Session.Types.URR do
  typedstruct do
    field :urr_id, non_neg_integer()
    field :measurement_method, :duration | nil
    field :reporting_triggers, :time_threshold | nil
    field :time_threshold, non_neg_integer() | nil  # □
  end
end
```

□□□ PFCP □□□□ □□□ URR PFCP □□□□□□□□□□□□□□□□□□ URR□

CDR □□□□

□□□□□□ CDR □□

PGW-C CDR □□:

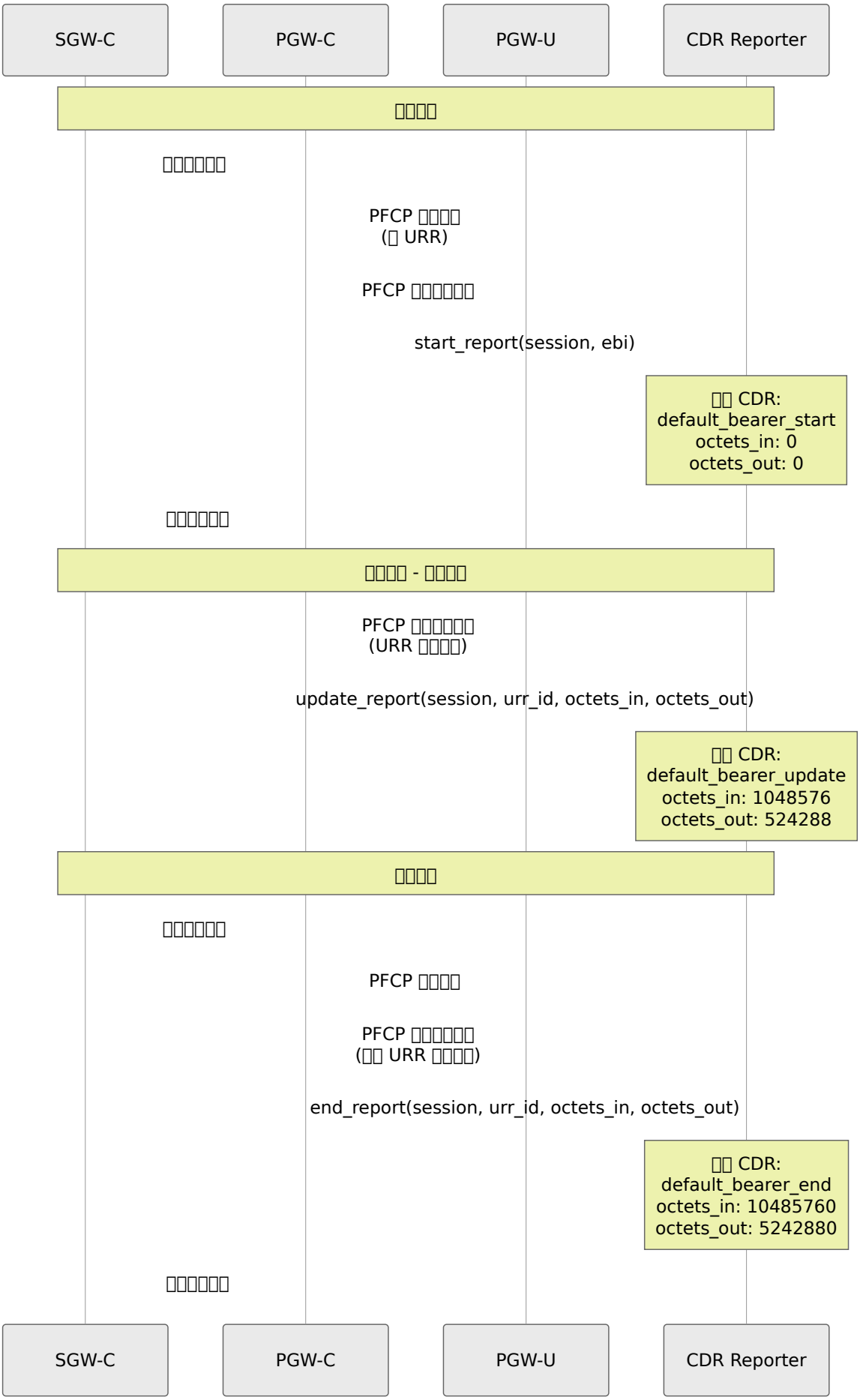
SGW-C
PGW-C
PGW-U
CDR Reporter
□□□□□
□□□□□□□□
PFCP □□□□□
(□ URR)
PFCP □□□□□□□□
start_report(session, ebi)
□□ CDR:
default_bearer_start
octets_in: 0
octets_out: 0
□□□□□□□□
□□□□□ - □□□□□
PFCP □□□□□□□□
(URR □□□□□)
update_report(session, urr_id, octets_in, octets_out)
□□ CDR:
default_bearer_update
octets_in: 1048576
octets_out: 524288
□□□□□
□□□□□□□□
PFCP □□□□□
PFCP □□□□□□□□
(□□ URR □□□□□)
end_report(session, urr_id, octets_in, octets_out)
□□ CDR:
default_bearer_end
octets_in: 10485760
octets_out: 5242880
□□□□□□□□
SGW-C
PGW-C
PGW-U
CDR Reporter

CDR □□□□

1. □□□□**:**

- **□□:** □□□□□□□□□
- **□□:** □□□□□□□□□□□□
- **octets_in:** 0
- **octets_out:** 0

2. □□□□**:**

- **□□:** □ PGW-U □□□ PFCP □□□□□□□URR □□□□□
- **□□:** □□□□□□□□□□
- **octets_in:** □□□□□□□□□□□□□□□
- **octets_out:** □□□□□□□□□□□□□□□
- **□□:** URR □□□□□□□□□ `usage_report_interval` □□□

3. □□□□**:**

- **□□:** □ PGW-U □□□ PFCP □□□□□□□□□□□□□□□□
- **□□:** □□□□□□□□□□□□□□□□□□
- **octets_in:** □□□□□□□
- **octets_out:** □□□□□□□

□□□□□□

1. epoch (□□□)

□□: Unix □□□□□□□□

□□: CDR □□□□□□□

□□:

```
1726598022  → 2025-09-17 18:53:42 UTC
```

---

2. imsi (□□□□)

□□: □□□□□□□ 15 □□□□

□□: MCCMNC + MSIN

□□: □□□□□□□□□□□□□□□□□

□□:

```
310260123456789
  └──┘ └──┘ └─────────┘
   MCC  MNC     MSIN
   (310)(260) (123456789)
```

□□: UE □□□□□□□□□□□□□

---

3. event (CDR □□□□)

□□: □□□

□□: `<bearer_type>_bearer_<event>`

□:

- `default_bearer_start`
- `default_bearer_update`
- `default_bearer_end`
- `dedicated_bearer_start`
- `dedicated_bearer_update`
- `dedicated_bearer_end`

□□:

- □□ EBI□EPS □□ ID□□□ LBI□□□□□ ID□□`default`
- □□ EBI □□□ LBI□`dedicated`

□□: □□□□□□EBI □ LBI □□□

---

4. charging_id (□□□□□)

□□: □□□ 32 □□□

□□: □□□□□□□□□□□□□□□□□□□□

□□:

```
12345
```

□□: □ PGW-C □□□□□□□□□□□□□□

□□:

- □□ SGW □ PGW □□□□□□□
- □□ Diameter Gy/Gz □□□□
- □□□□□□

---

5. msisdn (□□□)

□□: □□□□E.164 □□□

□□: □□□ ISDN □□□□□□□□□□□

□□: □□□□ + □□□□

□□:

```
15551234567
 └┘└──────┘
  CC   □□
  (1) (5551234567)
```

□□: UE □□□□□□□□ HSS □□ MME

---

6. ue_imei (□□□□)

□□: □□□□15 □□□□

□□: TAC (8) + SNR (6) + Spare (1)

□□□□: □□□□□□□□□□□□□□□□□□

□□:

```
123456789012345
└──────┘└──┘└
   TAC   SNR S
```

□□: UE □□□□□ MME □□

---

7. timezone_raw (UE □□)

□□: □□□□□□□□□/□□□

□□: □□ UE □□□□□□□□□□

□□□□: □□□□CSV □□□□□□

□□□□: □□□□□□□□□□□□□□□

□□:

```
,  (□□□)
```

---

8. plmn (□□□□□)

□□: □□□□□□□□□

□□: □□□□□□□□□□□□□□□□□□□□□□□□□□□□

□□□□:

```
MCC: 505, MNC: 57
  ↓
"50557"
  ↓
□□□: "055570"
  ↓
□□□□□□□□□: 0x055570 = 349552
```

□□:

```
349552  → MCC: 505, MNC: 57
```

□□: □ MME □□□ UE □□□□

□□: □□□□□□□□□□□□□□□

---

9. tac (□□□□□□)

□□: □□□ 16 □□□

□□: □□□□□□□□□ UE □□□□□□□□

□□: 0 - 65535

□□:

```
1234
```

□□: UE □□□□□□□ MME □□□□□□□□□□□□

□□:

- □□□□□□□□□□
- □□□□□□□□□□□
- TAI□□□□□□□□□□□□□□□

---

10. eci (E-UTRAN □□□□□□)

□□: □□□ 28 □□□

□□: E-UTRAN □□□□□□□□□□□□ UE □□□□□□

□□: eNodeB ID□20 □□ + □□ ID□8 □□

□□: 0 - 268,435,455

□□:

```
5678
```

□□: □ MME □□□ UE □□□□

□□:

- □□□□□□□□□□□□□
- □□□□□□□□□□□
- □□□□□□□□

---

11. sgw_ip (SGW □□□□ IP)

□□: □□□□IPv4 □ IPv6 □□□

□□: SGW-C □ S5/S8 □□□□ IP □□□F-TEID□

□□: □□□□□□IPv4□□□□□□□□□IPv6□

□□:

```
10.0.0.15       (IPv4)
2001:db8::15    (IPv6)
```

□□: □□□□□□□□□ S5/S8 □□

---

12. ue_ip (UE IP □□)

□□: □□□□IPv4|IPv6 □□□

□□: □□□ UE □ PDN □□□ IP □□

□□: `<ipv4>|<ipv6>`

□□:

```
172.16.1.100|                      (□ IPv4)
|2001:db8::1                       (□ IPv6)
172.16.1.100|2001:db8::1          (□□)
```

□□: PGW-C □ PDN □□□□□PAA□

□□:

- □ IPv4: □□□ IPv4 □□
- □ IPv6: □□□ IPv6 □□
- □□□□□: □□ PDN □□

---

13. pgw_ip (PGW □□□□ IP)

□□: □□□□IPv4 □ IPv6 □□□

□□: PGW-C □ S5/S8 □□□□ IP □□□□□ F-TEID□

□□: □□□□□□IPv4□□□□□□□□□IPv6□

□□:

```
10.0.0.20       (IPv4)
2001:db8::20    (IPv6)
```

□□: □ PGW-C □□□□□□□□□□

---

14. apn (□□□□)

□□: □□□□□□ 100 □□□□

□□: □□□□□□□PDN□□□□□□□

□□: □□ DNS □□□□□

□□:

```
internet
ims
mms
enterprise.corporate
```

□□: □ MME □□□□□□□□□□

□□:

- □□□□□□□□□□□□
- □□□□□□□□□
- □□□□ IP □□□

---

15. qci (QoS □□□□)

□□: □□□ 8 □□□

□□: QoS □□□□□□□□□□□□□□□□

□□: 1 - 9□□□□□□□128-254□□□□□□□□

□□□ QCI □:

QCI	□□□□	□□□	□□□□□	□□□□□	□□□□
1	GBR	2	100 ms	10^-2	□□□□
2	GBR	4	150 ms	10^-3	□□□□
3	GBR	3	50 ms	10^-3	□□□□
4	GBR	5	300 ms	10^-6	□□□□□
5	Non-GBR	1	100 ms	10^-6	IMS □□
6	Non-GBR	6	300 ms	10^-6	□□□□□
7	Non-GBR	7	100 ms	10^-3	□□□□□□□□
8	Non-GBR	8	300 ms	10^-6	□□□□□
9	Non-GBR	9	300 ms	10^-6	□□□□

□□:

```
9  → □□□□□□□□□□□□
```

□□: PGW-C □□□ QoS □□

---

16. octets_in (□□□□)

□□: □□□ 64 □□□

□□: □□□□□□□□□ → UE□□□□□□□□

□□: □□

□□:

```
1048576  → 1 MB □□
```

□□: PGW-U □ PFCP □□□□□□□ URR □□□□□

□□:

- □□ `update` □□□□□□
- □□ `end` □□□□□□□
- □□ `start` □□□□□ 0
- □□□ URR □□□□□□□□□ `usage_report_interval` □□□

---

17. octets_out (□□□□)

□□: □□□ 64 □□□

□□: □□□□□□UE → □□□□□□□□□

□□: □□

□□:

```
524288  → 512 KB □□
```

□□: PGW-U □ PFCP □□□□□□□ URR □□□□□

□□:

- □□ `update` □□□□□□□
- □□ `end` □□□□□□□□
- □□ `start` □□□□□□ 0
- □□□ URR □□□□□□□□□□ `usage_report_interval` □□□

□□

□□ 1: □□□□□□□□□□

□□□**:**

1. □□□□
2. 5 □□□: □□□□□□10 MB □□□5 MB □□□
3. □□□□

CDR □□:

```
# □□ CDR □□:
# □□□□□□□: 10:00:00 (1726570800)
# □□□□□□□: 11:00:00 (1726574400)
# □□□□: pgw-c-01
# epoch,imsi,event,charging_id,msisdn,ue_imei,timezone_raw,plmn,tac,e
1726570800,310260111111111,default_bearer_start,10001,15551111111,111
1726571100,310260111111111,default_bearer_update,10001,15551111111,11
1726571400,310260111111111,default_bearer_end,10001,15551111111,11111
```

□□ 2: □□□□□□□□□□

□□□**:**

1. □□□□□□□□IPv4 + IPv6□
2. □□□□□□□
3. □□□□

CDR □□:

```
1726570800,310260222222222,default_bearer_start,10002,15552222222,222
1726571100,310260222222222,default_bearer_update,10002,15552222222,22
1726571400,310260222222222,default_bearer_update,10002,15552222222,22
1726571700,310260222222222,default_bearer_update,10002,15552222222,22
1726572000,310260222222222,default_bearer_end,10002,15552222222,22222
```

□□ 3: □□□□□□□

□□□:

1. □□□□□□□□QCI 9□
2. □□□□□□□□□□□□QCI 6□
3. □□□□□□□□□□
4. □□□□□□
5. □□□□□□

CDR □□:

```
1726570800,310260333333333,default_bearer_start,10003,15553333333,333
1726571100,310260333333333,dedicated_bearer_start,10004,15553333333,3
1726571400,310260333333333,default_bearer_update,10003,15553333333,33
1726571400,310260333333333,dedicated_bearer_update,10004,15553333333,
1726571700,310260333333333,dedicated_bearer_end,10004,15553333333,333
1726572000,310260333333333,default_bearer_end,10003,15553333333,33333
```

□□:

- □□□□□10003□□□□□□□□□10 MB □□□4 MB □□□
- □□□□□10004□□□□□□□□□200 MB □□□2 MB □□□
- □□□ QCI □□9 □ 6□□□□□□ QoS □□

□□

CDR □□□□

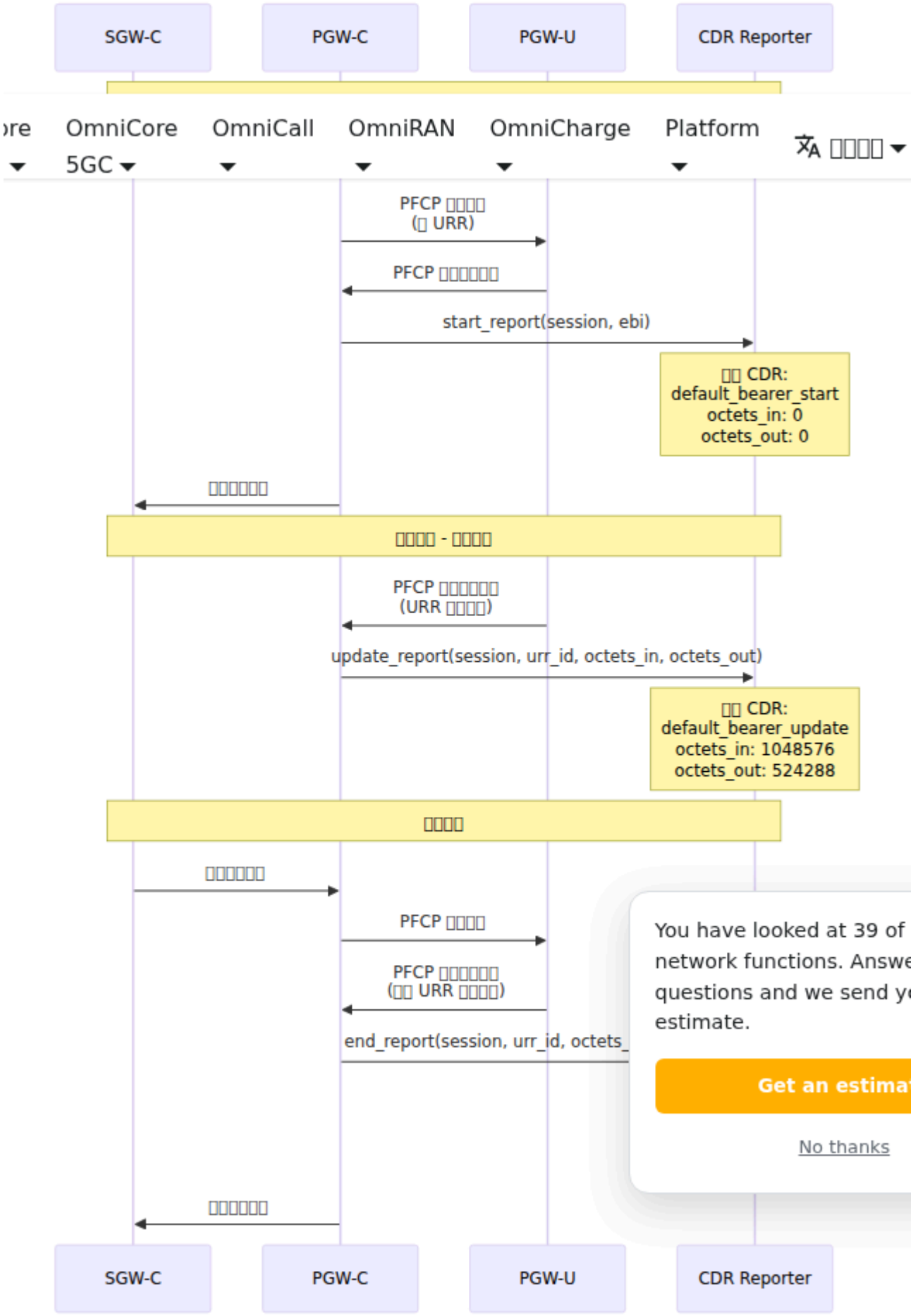

You have looked at 39 of
network functions. Answe
questions and we send y
estimate.
Get an estima
No thanks

CDR □□□□

1. □□□□□□□□:

```
# □□ CDR □□ (PGW-C)
inotifywait -m /var/log/pgw_c/cdrs/ -e close_write | while read
path action file; do
    # □□□□□□□□□□ CDR
    process_cdr "$path$file"
done
```

2. □□□□□:

```
# □□□□□□□□□□□□□□
tail -F /var/log/pgw_c/cdrs/* | process_cdr_stream
```

□□□□

- □□□□ - □□□□□□□□ CDR □□
- PFCP □□ - □□ URR □ PGW-U □□□□□□
- □□□□ - CDR □□□□□□□
- □□□□ - CDR □ URR □□□□
- Diameter Gx □□ - CDR □ QCI □□□□□□
- Diameter Gy □□ - □□□□□□

3GPP □□

- TS 32.251 - □□□□PS□□□□
- TS 29.274 - 3GPP □□□□□□□EPS□□GTP-C □□
- TS 29.244 - CP □ UP □□□□□□□□PFCP□ - **URR** □□
- TS 32.298 - CDR □□

CDR □□ - *PGW-C □□□□□□□*

□ Omnitouch □□□□□□

□□□□: 1.0 **□□□□:** 2025-12-28

Diameter Gx □□□□

□□□□□□□□□□ **(PCRF)** □□

□□

1. □□
2. Gx □□□□
3. Diameter □□
4. □□□□□□□
5. □□□□□□□□
6. □□□□□□□
7. □□
8. □□□
9. □□□□
10. □□□□

□□

Gx □□ □ PGW-C □□□ **PCRF**□□□□□□□□□□□□ □ **PCF**□□□□□□□□□ □ 5G □□□□□□□□□□□

- □□□□□□□ - □□ QoS □□□□□□
- □□□□ - □□□□□□□□□□
- □□□□ - □□□□□□□□
- □□□□□□□ - □□□□□□□□

□□□□□□ Gx

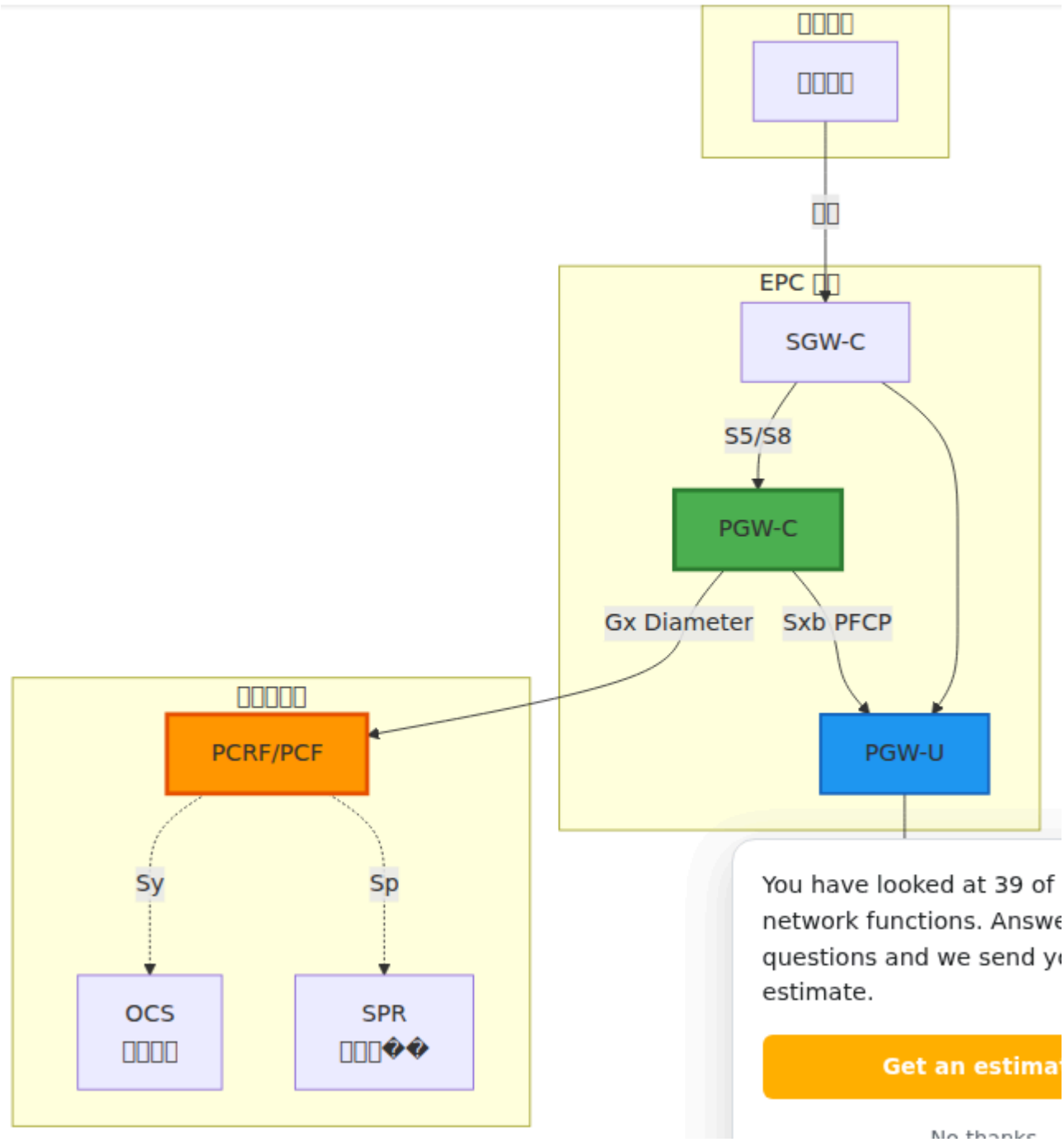
□□□□
□□□□
□□
EPC □□
SGW-C
S5/S8
PGW-C
Gx Diameter
Sxb PFCP
PGW-U
□□□□□
PCRF/PCF
Sy
Sp
OCS
□□□□
SPR
□□□□
You have looked at 39 of
network functions. Answe
questions and we send y
estimate.
Get an estima
No thanks

□□□□

□□	□□
□□□□	PCRF □□ PCC □□□□□□□□□□□
QoS □□	□□□□□□□□ QoS □□
□□□□	□□□/□□□□□□□□□
□□□□	□□□□□□/□□□□
□□□□	□□□□□□□□□□□

Gx □□□□

3GPP □□

- □□□ 3GPP TS 29.212
- **Diameter □□ ID**□ 16777238 (Gx)
- □□□ Diameter □□□□ (RFC 6733)

□□□□

□□ UE PDN □□□□□□□□□ **Gx □□□□ Session-ID** □□□□□□□

- □ UE □□□□□ (CCR-Initial)
- □□□□□□□□□□ (CCR-Update) - □□□□□□□□□□ □□□□□□
- □ UE □□□□□ (CCR-Termination)

□□ ID □□

```
Session-ID: <Origin-Host>;<high32>;<low32>[;<optional>]
□□: omni-pgw_c.epc.mnc999.mcc999.3gppnetwork.org;1234567890;98765
```

□□□

- **Origin-Host**□ PGW-C □ Diameter □□
- **high32**□ □□□□□□□ 32 □
- **low32**□ □□□□□□□ 32 □

Diameter □□

□□□□

Diameter □□□□□□□□□□□□□□□□□□□

```
Diameter Header (20 bytes)
├── Version (1 byte) = 1
├── Message Length (3 bytes)
├── Flags (1 byte)
│   ├── R: Request (1) / Answer (0)
│   ├── P: Proxiable
│   ├── E: Error
│   └── T: Potentially retransmitted
├── Command Code (3 bytes)
├── Application ID (4 bytes) = 16777238 (Gx)
├── Hop-by-Hop ID (4 bytes)
└── End-to-End ID (4 bytes)

AVPs (□□-□□)
├── AVP Header
│   ├── AVP Code
│   ├── Flags (V, M, P)
│   ├── AVP Length
│   └── Vendor ID (optional)
└── AVP Data
```

□□ Diameter □□

AVP□□□-□□□□

- Diameter □□□□□□□□□
- □□□□□□□□□
- □□□□□□□ AVP□

□□□

- □□/□□□
- CCR□□□□□□□□/ CCA□□□□□□□□

□□□□□

- `2001` - DIAMETER_SUCCESS
- `3xxx` - □□□□
- `4xxx` - □□□□

- `5xxx` - □□□□

□□□□□□

PGW-C □□ **Diameter** □□□□□□ (RFC 4006) □□ Gx□

□□□□

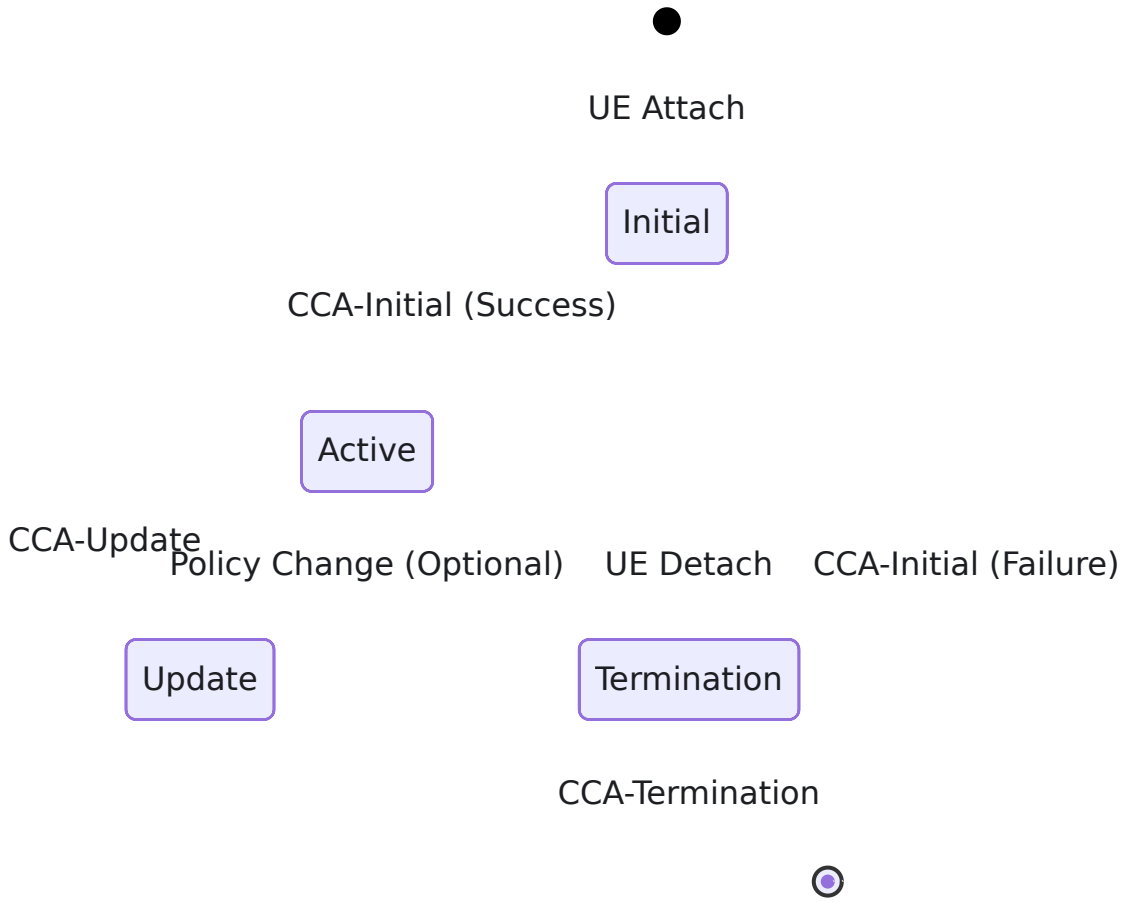

CCR-Initial□□□□□□□ - □□□

□□□ UE □□□□ PDN □□

□□□

- □□□□□□□□□□□□
- □ PCRF □□ UE □□□□□□

- □□ QoS □□□□□□□□

PGW-C □□□□□ AVP□

AVP □□	AVP □□	□□	□□
Session-Id	263	UTF8String	□□ Gx □□□□□
Auth-Application-Id	258	Unsigned32	16777238 (Gx)
Origin-Host	264	DiamIdent	PGW-C □ Diameter □□
Origin-Realm	296	DiamIdent	PGW-C □ Diameter □□
Destination-Realm	283	DiamIdent	PCRF □□□
CC-Request-Type	416	Enumerated	1 = INITIAL_REQUEST
CC-Request-Number	415	Unsigned32	□□□□□ 0 □□□
Subscription-Id	443	Grouped	UE □□□ (IMSI/MSISDN)
Called-Station-Id	30	UTF8String	APN □□
Framed-IP-Address	8	OctetString	□□□ UE IPv4 □□ (IPv4 □ IPv4v6 PDNs)
Framed-IPv6-Prefix	97	OctetString	□□□ UE IPv6 □□ (□ IPv6 PDNs)
3GPP-User-Location-Info	22	OctetString	□□□□ ULI (TS 29.061)
User-Equipment-Info	458	Grouped	UE □□ (□□ IMEISV)□□□□□
IP-CAN-Type	1027	Enumerated	5 = 3GPP-EPS
RAT-Type	1032	Enumerated	□ GTP RAT □□□□□□ (□□ 1004 = EUTRAN)

AVP □□	AVP □□	□□	□□
QoS-Information	1016	Grouped	□□ QoS (APN-AMBR UL/DL)
Default-EPS-Bearer-QoS	1049	Grouped	□□□□ QCI/ARP (QCI 5)
Network-Request-Support	1024	Enumerated	□□□□□□□
Supported-Features	628	Grouped	Gx □□□□ (Rel-8/9/10 Gx)

> □□□ AVP □ UE □□□□□□ `Framed-IP-Address` □□ IPv4□□ IPv4v6 PDN □ IPv4□□ `Framed-IPv6-Prefix` □□□ IPv6 PDN□□□ IPv4v6□IPv6 □□□□□ Gx □□□□□□□ IPv6 / □□□

□□ CCR-I □□□

```
CCR (Command Code: 272, Request)
├── Session-Id: "pgw_c.example.com;123;456"
├── Auth-Application-Id: 16777238
├── Origin-Host: "omni-pgw_c.epc.mnc999.mcc999.3gppnetwork.org"
├── Origin-Realm: "epc.mnc999.mcc999.3gppnetwork.org"
├── Destination-Realm: "epc.mnc999.mcc999.3gppnetwork.org"
├── CC-Request-Type: INITIAL_REQUEST (1)
├── CC-Request-Number: 0
├── Subscription-Id (Grouped)
│   ├── Subscription-Id-Type: END_USER_IMSI (1)
│   └── Subscription-Id-Data: "310260123456789"
├── Called-Station-Id: "internet"
├── Framed-IP-Address: 100.64.1.42
├── IP-CAN-Type: 3GPP-EPS (5)
├── RAT-Type: EUTRAN (1004)
├── QoS-Information (Grouped)
│   ├── APN-Aggregate-Max-Bitrate-UL: 100000000 (100 Mbps)
│   └── APN-Aggregate-Max-Bitrate-DL: 50000000 (50 Mbps)
├── Network-Request-Support: 1
└── Supported-Features: [...]
```

CCA-Initial□□□□□□□ - □□□

□□□□ PCRF □□ CCR-I

□□□

- □□□□□□□□
- □□□□□□□ PCC □□
- □□ QoS □□

PGW-C □□□□□ AVP□

AVP □□	AVP □□	□□
Result-Code	268	□□ (2001) □□□□□
Experimental-Result	297	□□□□□□□□□
QoS-Information	1016	□□□ QoS (□□□□□□□)
Charging-Rule-Install	1001	□□□□ PCC □□
Charging-Rule-Definition	1003	□□□□□□
Default-EPS-Bearer-QoS	1049	□□□□□ QoS

□□□□□□□

```
CCA (Command Code: 272, Answer)
├── Session-Id: "pgw_c.example.com;123;456"
├── Result-Code: DIAMETER_SUCCESS (2001)
├── Origin-Host: "pcrf.example.com"
├── Origin-Realm: "example.com"
├── Auth-Application-Id: 16777238
├── CC-Request-Type: INITIAL_REQUEST (1)
├── CC-Request-Number: 0
├── QoS-Information (Grouped)
│   ├── APN-Aggregate-Max-Bitrate-UL: 50000000 (50 Mbps - reduced)
│   └── APN-Aggregate-Max-Bitrate-DL: 100000000 (100 Mbps -
increased)
├── Charging-Rule-Install (Grouped)
│   ├── Charging-Rule-Name: "default_internet_rule"
│   └── Charging-Rule-Name: "video_streaming_rule"
└── Charging-Rule-Definition (Grouped)
    ├── Charging-Rule-Name: "default_internet_rule"
    ├── QoS-Information: {...}
    └── Precedence: 1000
```

CCR-Termination□□□□□□□ - □□□

□□□ UE □□□ PDN □□□□□

□□□

- □□ PCRF □□□□
- □□□□/□□□□

□ **CCR-I** □□□□□□

- `CC-Request-Type: TERMINATION_REQUEST (3)`
- □□□□□□□□□□
- □□□ AVP □□

□□ **CCR-T**□

```
CCR (Command Code: 272, Request)
├── Session-Id: "pgw_c.example.com;123;456"
├── Auth-Application-Id: 16777238
├── Origin-Host: "omni-pgw_c.epc.mnc999.mcc999.3gppnetwork.org"
├── Origin-Realm: "epc.mnc999.mcc999.3gppnetwork.org"
├── Destination-Realm: "epc.mnc999.mcc999.3gppnetwork.org"
├── CC-Request-Type: TERMINATION_REQUEST (3)
├── CC-Request-Number: 1
└── Termination-Cause: DIAMETER_LOGOUT (1)
```

CCA-Termination

□□□□ PCRF □□ CCR-T

□□□

- □□□□□□□
- □□□□□□□□

□□ **CCA-T**□

```
CCA (Command Code: 272, Answer)
├── Session-Id: "pgw_c.example.com;123;456"
├── Result-Code: DIAMETER_SUCCESS (2001)
├── Origin-Host: "pcrf.example.com"
├── Origin-Realm: "example.com"
├── Auth-Application-Id: 16777238
├── CC-Request-Type: TERMINATION_REQUEST (3)
└── CC-Request-Number: 1
```

□□□□□□□

PCC □□□□

PCC□□□□□□□□□□□□ □□□□□□□□□□□□□

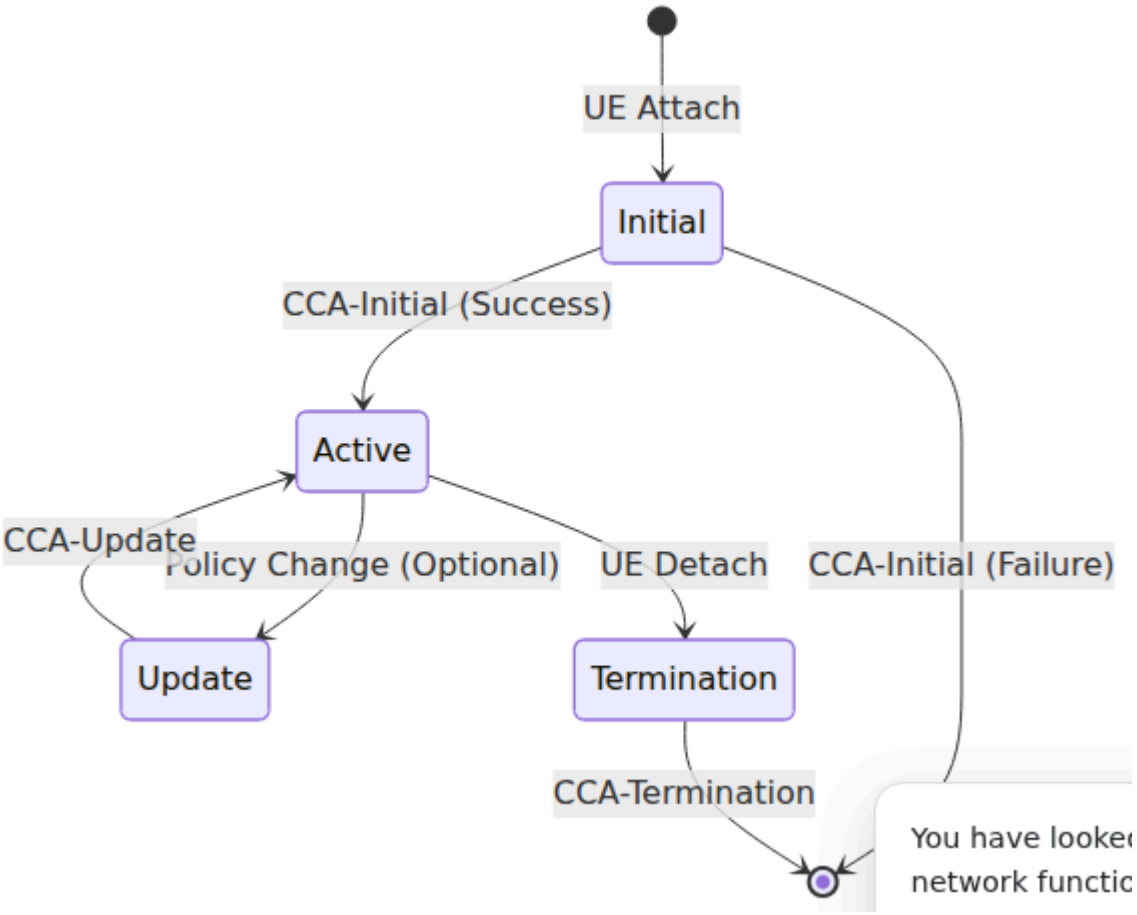

□□□□

1. □□□□□

- □□□□□□□□□
- □□□`"video_streaming_rule"`

2. □□□□

- □□□□ = □□□□□
- □□□0-65535
- □□□□□□□□□□

3. □□□□□**TFT -** □□□□□□□

- □□□□□□□□□□□□
- □□□
  - IP 5 □□□□□□□/□□ IP□□/□□□□

- `"permit out ip from any to 8.8.8.8 80"`

4. QoS □□□

- **QCI□QoS □□□□□□** 1-9□□□□□□□128-254□□□□□□□
  - QCI 1□□□□□
  - QCI 5□IMS □□
  - QCI 9□□□□□□
- **ARP□□□□□□□□□□□** □□□□
- **MBR/GBR□** □□/□□□□□

5. □□□□□

- □□□□ □□□□□□□□ OCS □□ - □□ Diameter Gy □□□
- □□□□□ □□□□□□□□□□□□□□
- □□/□□□□□ OCS□□□ Diameter Gy □□□□□□□□ CDR□□□□ - □□ □□ CDR □□□

6. □□□□□

- □□□ □□□□
- □□□ □□□□

□□□□□□

PCRF □□□□□□□□□□□□□□

1. □□□□□□□□□□□

```
Charging-Rule-Install (Grouped)
├── Charging-Rule-Name: "gold_subscriber_internet"
└── Charging-Rule-Name: "video_qos_boost"
```

2. □□□□□□□□□□□

```
Charging-Rule-Definition (Grouped)
├── Charging-Rule-Name: "dynamic_rule_123"
├── Precedence: 100
├── Flow-Information (Grouped)
│   ├── Flow-Description: "permit out ip from any to 192.0.2.0/24"
│   └── Flow-Direction: DOWNLINK
├── QoS-Information (Grouped)
│   ├── QoS-Class-Identifier: 5
│   ├── Max-Requested-Bandwidth-UL: 10000000
│   └── Max-Requested-Bandwidth-DL: 50000000
└── Rating-Group: 1000
```

QoS □□ AVP

APN-AMBR□□□□□□□□□□

□□□□ APN □□□□ GBR □□□

```
QoS-Information (Grouped)
├── APN-Aggregate-Max-Bitrate-UL: 100000000  # 100 Mbps
└── APN-Aggregate-Max-Bitrate-DL: 200000000  # 200 Mbps
```

PGW-C □□□

- □□□□ AMBR □□
- □ PGW-U □□□□□□ QER □□□□□□□

□□□□□□

PGW-C □□□□□□□□□□□□ PCRF □□□□ □□□□□□□□□ **(RAT)**□□□ **PLMN** □ **UE** □□ □□□□□□□ □□□ **CCR-Update** □□□ **3GPP-User-Location-Info** □□□ AVP □□□

□□□□□□□□PCRF □□□

□□□□ □□ **PCRF** □□□ — □□ 3GPP TS 29.212 §4.5.7 / §5.3.7 □□□□□PCRF □□ □□□□□□□ □□□□□ **CCA**□□ **RAR**□□□□□□□□□ **Event-Trigger** AVP□PGW-C □□□ Gx □□□□□□□□□□□□

□□□□□ CCR-Update□

1. □□□ Event-Trigger □□□□□□□□□□
2. □□□□□□ Gx □□□

□□ PCRF □□ □□ □□□□□□ Event-Triggers□PGW-C □□□□□□□□□□ — □□□□□□□□□□□□□ GTP-C □□□□□□□□□□□□□□□□□□□□ PCRF □□□□□□□□□□□□ PCRF □□□□□□

□□□□□□□□□□□□□□□□□□ PGW-C □ PCRF □□□□□ Event-Trigger AVP □□□□ — □ CCA-Initial□CCA-Update □ PCRF □□□ **RAR** □□□□□ Event-Trigger □□□□□□□□□□□□ Event-Trigger AVP □□□□□□□□□□□□□□□PCRF □□□□□□□□□□□□□□□□□□□□□□□ RAR □□□□□□□□□□□□□□□

□□□□□□□□

Event-Trigger	□	□□□...	□□□ **AVP**
`RAT_CHANGE`	2	RAT-Type □□□□□□ EUTRAN → UTRAN□	`RAT-Type`
`PLMN_CHANGE`	4	□□□□□MCC/MNC□□□	`3GPP-SGSN-MCC-MNC`
`USER_LOCATION_CHANGE`	13	□□□□□□□□□□□□	`3GPP-User-Location-Info`
`UE_TIME_ZONE_CHANGE`	25	UE □□□□	`3GPP-MS-TimeZone`
`TAI_CHANGE`	26	□□□□□□□□□	`3GPP-User-Location-Info`
`ECGI_CHANGE`	27	E-UTRAN □□□□□□□□	`3GPP-User-Location-Info`

□□□□□□□□□□□□□□□□□□□□□□□□□□□□□□□□□□□ `USER_LOCATION_CHANGE`□`TAI_CHANGE` □ `ECGI_CHANGE`□□□□□□□□□□□□□□□□□□ CCR-Update □ `Event-Trigger` AVP □□

□□□□

- **CCR-Initial** □□□□□□□□□ `3GPP-User-Location-Info`□□ PCRF □□□□□
- □□□□□□**GTP-C** □□□□□□□□S5/S8□□□□□□□□□□□□□□RAT-Type□□□□□□ UE □□□PGW-C □□□
- □□□□□□□□□□□ IE □□□

3GPP-User-Location-Info □□

AVP □□ **3GPP TS 29.061 §16.4.7.2** □□□□□□□□ *□□□□□□* □□□□□□□□PLMN □□□□ 3GPP TS 24.008 §10.5.1.3 □□□□□□□□□□

□□	□	□□
CGI	0	PLMN + LAC + CI (2G)
SAI	1	PLMN + LAC + SAC (3G)
RAI	2	PLMN + LAC + RAC
TAI	128	PLMN + TAC (LTE)
ECGI	129	PLMN + ECI (LTE)
TAI □ ECGI	130	PLMN + TAC + PLMN + ECI (LTE□□□)

□□□

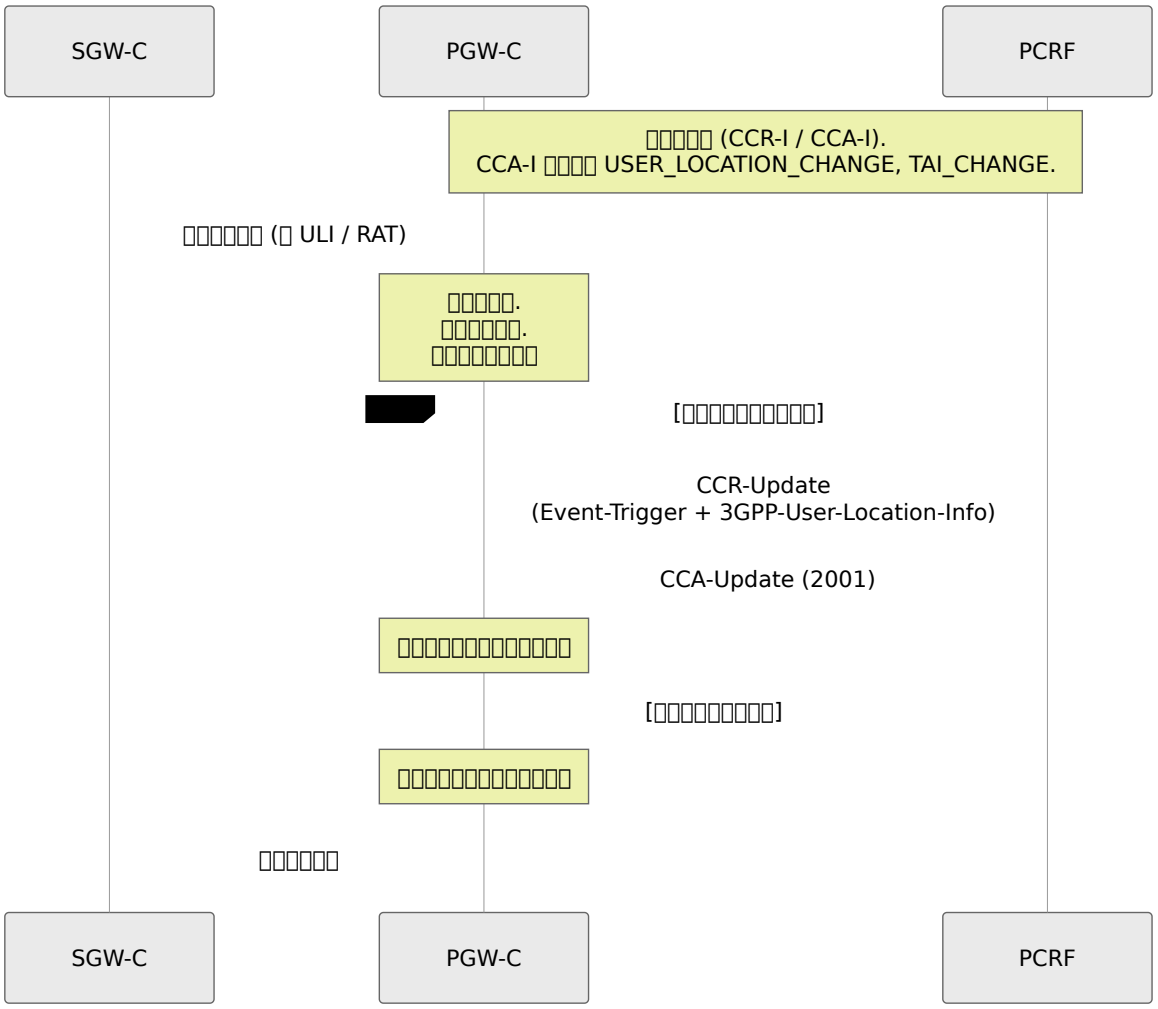

> □□□□ □ PCRF □□□□□□□□□ GTP-C □□□□□□□□□□ CCR-Update □□□ PCRF □□□□□□PGW-C □□□□□□□□□ SGW-C — □□□□□□□□□□□□□□□□□□□□□□□□□□□□□

□□ API □□□□□□□□

□□ API (`GET /api/sessions` □ `GET /api/sessions/:imsi`) □□□□□□□□□JSON □□□□□□ □ `state` □□□□□□□□□□□□□□□□□□PCRF □□□□□□□□□□ `state.gx.requested_event_triggers` □□□□□□□□□□ Gx □□□□□□`session_id`□ `cc_request_number`□□□□□□/□□□□□□□□ `state.uli`□□□□□□□□□□□□□□□□□□□

```
PATCH /api/sessions/310260000000001
Content-Type: application/json

{ "gx": { "requested_event_triggers": [13, 26, 27] } }
```

- ��□ Gx □□□□□□□□□□□□□□□□□□□□□□ `gx` □□□□□□□□□□□□□
- □□□ (`[]`) □□□□□□□□□□□□□□□
- □□□□□□□□□□□□□□□□□ `state`□

□□□□□ □□□□□□□□□□□□□□□□□□□□□□□□□□ *//* □□□□□□□□ — □□□□□□□□□□□□□□□□□□□□□□□□□□□□□□ UPF□□□ APN-AMBR □□□□□ QoS □□□□□□□□□□ QER□QCI / MBR / GBR□□□□□□□□□ QER □ □□ PFCP □□□□□□

```
PATCH /api/sessions/310260000000001
Content-Type: application/json

{ "ambr": { "uplink": 200000, "downlink": 200000 } }
```

```
PATCH /api/sessions/310260000000001
Content-Type: application/json

{ "default_bearer_qos": { "qci": 5, "mbr_ul": 300000, "mbr_dl":
250000 } }
```

□ `default_bearer_qos` □□□□ MBR/GBR□GBR □□□□□□□□□ QER □□□□□□□ APN-AMBR □□□□□□□ MBR□

> □□□□□□□□□□□□□ PGW-C □ PCRF □□□□□□□□PCRF □□□□□□ CCA □ RAR □□□□□□□□ □□□□□□□□□

□□

□□ Gx □□

□□ `config/runtime.exs`□

```
config :pgw_c,
  diameter: %{
    # □□ Diameter □□□ IP □□
    listen_ip: "0.0.0.0",

    # PGW-C □ Diameter □□ (Origin-Host)
    host: "omni-pgw_c.epc.mnc999.mcc999.3gppnetwork.org",

    # PGW-C □ Diameter □□ (Origin-Realm)
    realm: "epc.mnc999.mcc999.3gppnetwork.org",

    # PCRF □□□□□
    peer_list: [
      %{
        # PCRF Diameter □□
        host: "pcrf.epc.mnc999.mcc999.3gppnetwork.org",

        # PCRF □□□□□□ PGW-C □□□□□
        realm: "epc.mnc999.mcc999.3gppnetwork.org",

        # PCRF IP □□
        ip: "10.0.0.30",

        # PGW-C □□□□□ PCRF □□□
        # true = PGW-C □□□ PCRF
        # false = □□ PCRF □□
        initiate_connection: true
      }
    ]
  }
```

□□ PCRF □□□

□□□□□□□□□□□

```
config :pgw_c,
  diameter: %{
    listen_ip: "0.0.0.0",
    host: "omni-pgw_c.epc.mnc999.mcc999.3gppnetwork.org",
    realm: "epc.mnc999.mcc999.3gppnetwork.org",
    peer_list: [
      %{
        host: "pcrf-primary.example.com",
        realm: "epc.mnc999.mcc999.3gppnetwork.org",
        ip: "10.0.1.30",
        initiate_connection: true
      },
      %{
        host: "pcrf-backup.example.com",
        realm: "epc.mnc999.mcc999.3gppnetwork.org",
        ip: "10.0.2.30",
        initiate_connection: true
      }
    ]
  }
```

□□□□□

- Diameter □□□□□□□□□
- □□□□□□□□□
- □□□□□□□□□□□□□

□□□□

Diameter □□□□□ FQDN□□□□□□□□

```
# □□ - FQDN □□
host: "pgw_c.epc.mnc999.mcc999.3gppnetwork.org"

# □□□ - □□□□□ Diameter □□
host: "pgw_c"
host: "10.0.0.20"  # □□□ IP □□
```

□□□□□

- □□□□□□□□□
- □□□ 3GPP PLMN □□□□□`epc.mncXXX.mccYYY.3gppnetwork.org`

□□□

□□□□□□□□

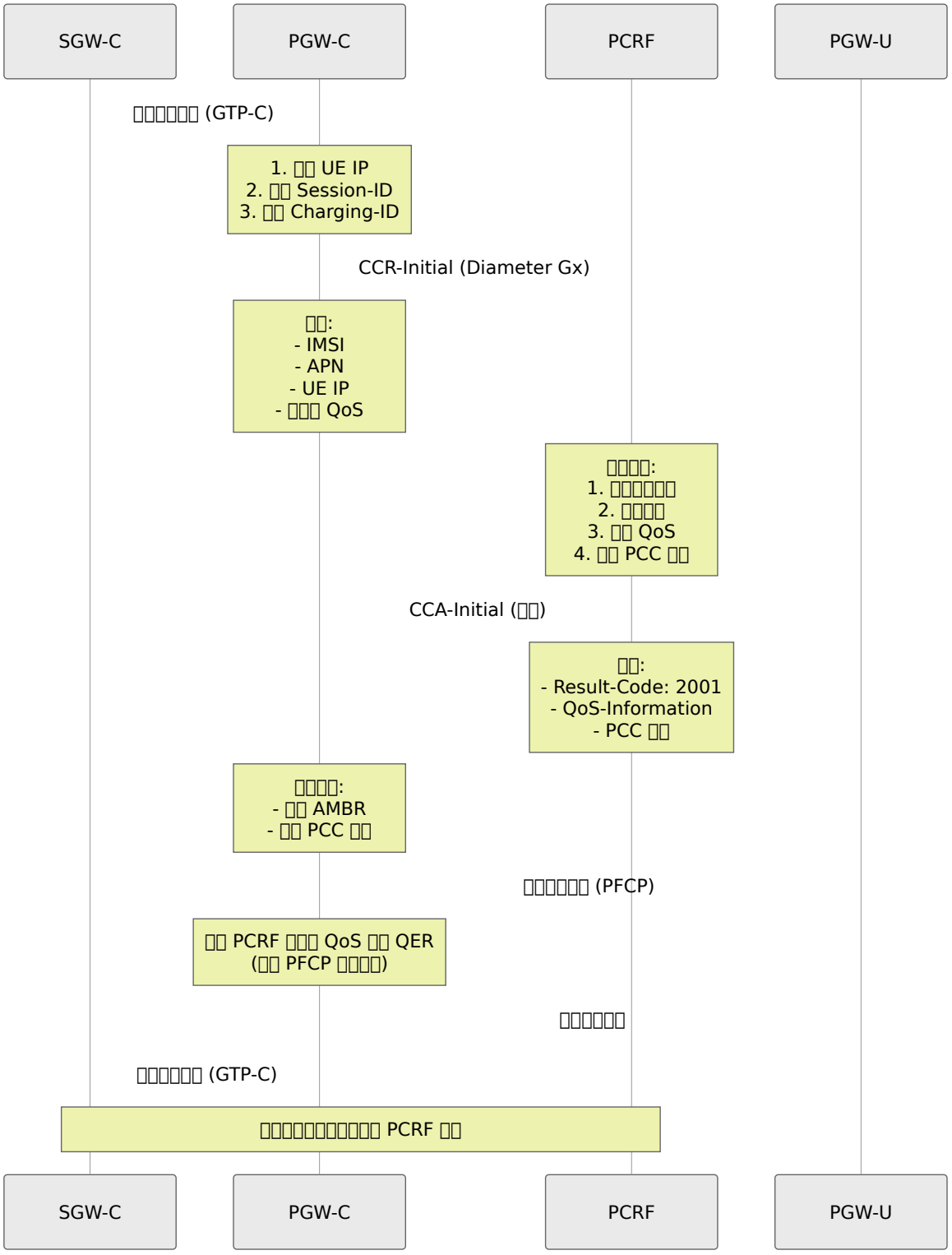

□□□ PCRF □ QoS □□□□□□□ QER□QoS □□□□□□□□□ PFCP □□□ PGW-U□□□□ PFCP □□ □□□ QER □□□□□

□□□□□□□□□□

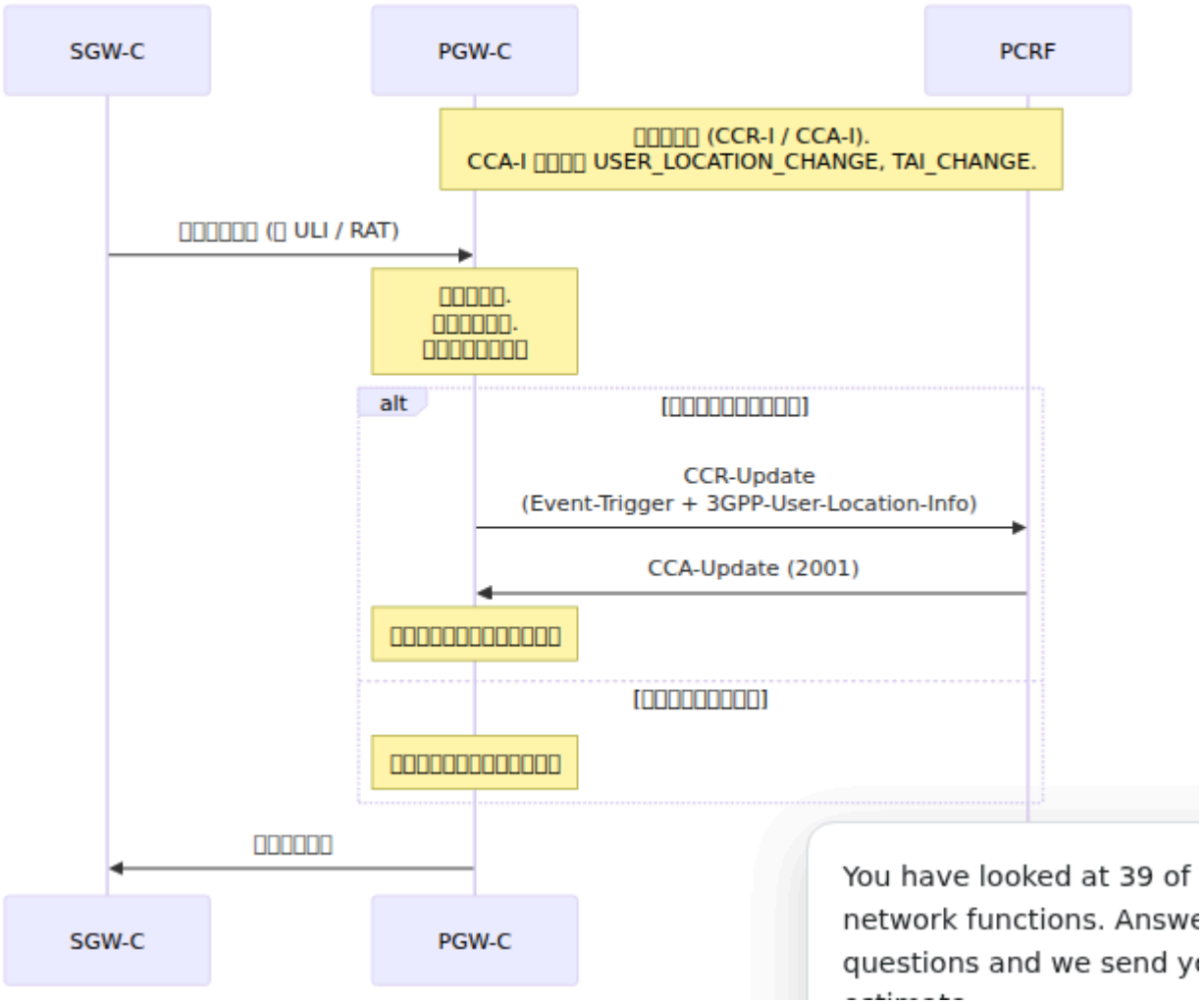

You have looked at 39 of
network functions. Answe
questions and we send y

???□□□

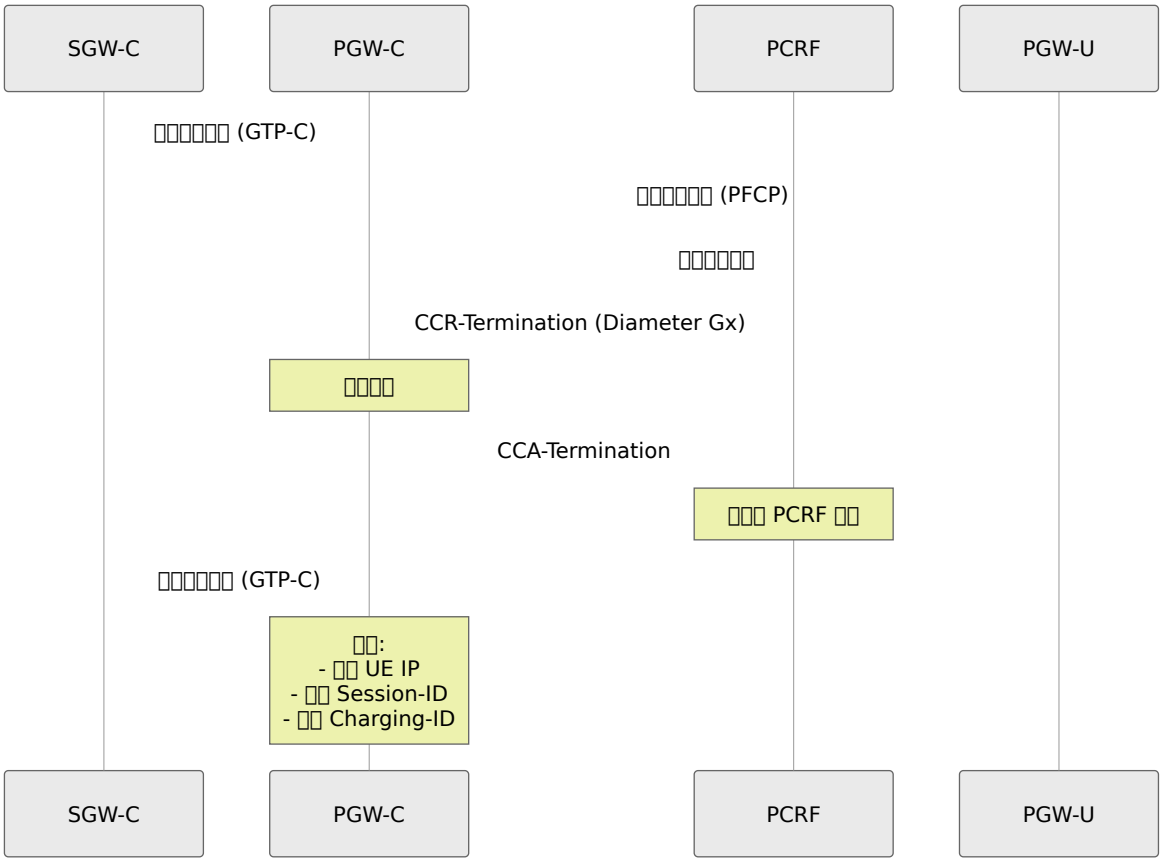

□□□□

□□□□

PGW-C □□ CCA □□□□□□□ Diameter □□□□□

□□□□□□

□□	□□	□□
2001	DIAMETER_SUCCESS	□□□□□□□

□□□□ (5xxx)□

□□	□□	**PGW-C □□**
5002	DIAMETER_UNKNOWN_SESSION_ID	□□□□□□□□□□
5030	DIAMETER_USER_UNKNOWN	□□□□□□□□□□□
5140	DIAMETER_ERROR_INITIAL_PARAMETERS	□□□□□□□□□□□
5003	DIAMETER_AUTHORIZATION_REJECTED	□□□□□□□□□□

□□□□ (4xxx)□

□□	□□	**PGW-C □□**
4001	DIAMETER_AUTHENTICATION_REJECTED	□□□□□□□□
4010	DIAMETER_TOO_BUSY	□□□□□
4012	DIAMETER_UNABLE_TO_COMPLY	□□□□□□□□□

□□□□□□□

□□□□□□□□□□□

```
Experimental-Result (Grouped)
├── Vendor-Id: 10415 (3GPP)
└── Experimental-Result-Code: <vendor-specific code>
```

□□□ 3GPP □□□□□

□□	□□	□□
5065	IP_CAN_SESSION_NOT_AVAILABLE	PCRF □□□□□□
5143	INVALID_SERVICE_INFORMATION	□□□□□□

□□□□

CCR-I □□□

□□ PCRF □□□□□□□□ CCR-Initial□

```
1. PGW-C □□□□□□□□□□□□□□5 □□
2. □□□□□□ CCA□
   - □□□“CCR-Initial □□□Session-ID: ...”
   - □ SGW-C □□□□□□□
   - □□□□□□□□
3. SGW-C □□□□□□□□□□□□□□□□□□□□□□□□□□□□
```

□ SGW-C □□□□□□

□ CCR-Initial □□□PGW-C □ SGW-C □□□□□□□□□□□□□□□□□
`:remote_peer_not_responding`□

□□□□

□□ **1□PCRF** □□□□□□□□□□□

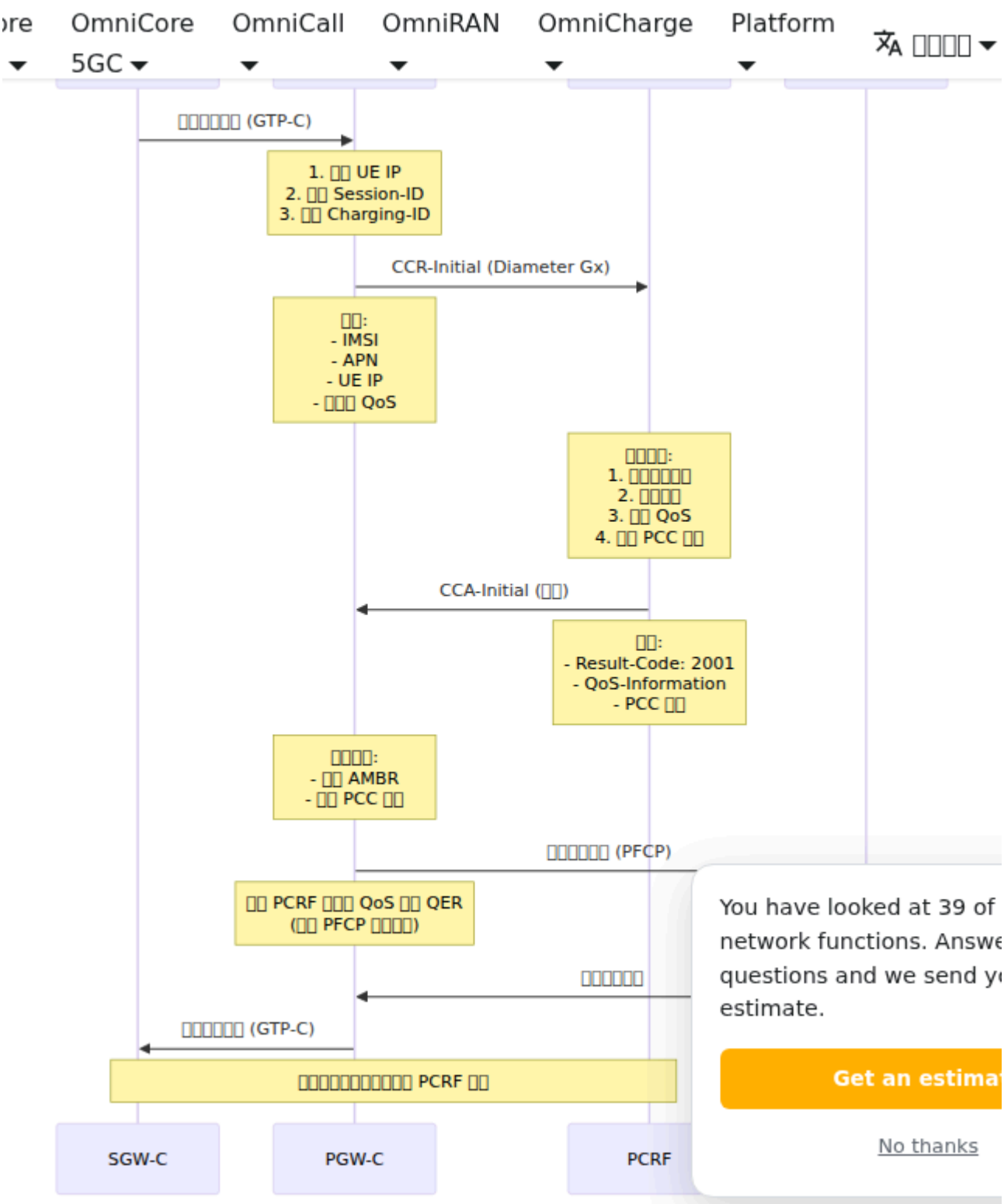
ore
OmniCore 5GC
OmniCall
OmniRAN
OmniCharge
Platform
□□□□□
□□□□□□□ (GTP-C)
1. □□ UE IP
2. □□ Session-ID
3. □□ Charging-ID
CCR-Initial (Diameter Gx)
□□:
- IMSI
- APN
- UE IP
- □□□ QoS
□□□□:
1. □□□□□□□
2. □□□□□
3. □□ QoS
4. □□ PCC □□
CCA-Initial (□□)
□□:
- Result-Code: 2001
- QoS-Information
- PCC □□
□□□□:
- □□ AMBR
- □□ PCC □□
□□□□□□□ (PFCP)
□□ PCRF □□□ QoS □□ QER
(□□ PFCP □□□□)
□□□□□□□
□□□□□□□ (GTP-C)
□□□□□□□□□□□□ PCRF □□
SGW-C
PGW-C
PCRF
You have looked at 39 of
network functions. Answe
questions and we send y
estimate.
Get an estima
No thanks

□□ 2□PCRF □□□□□□

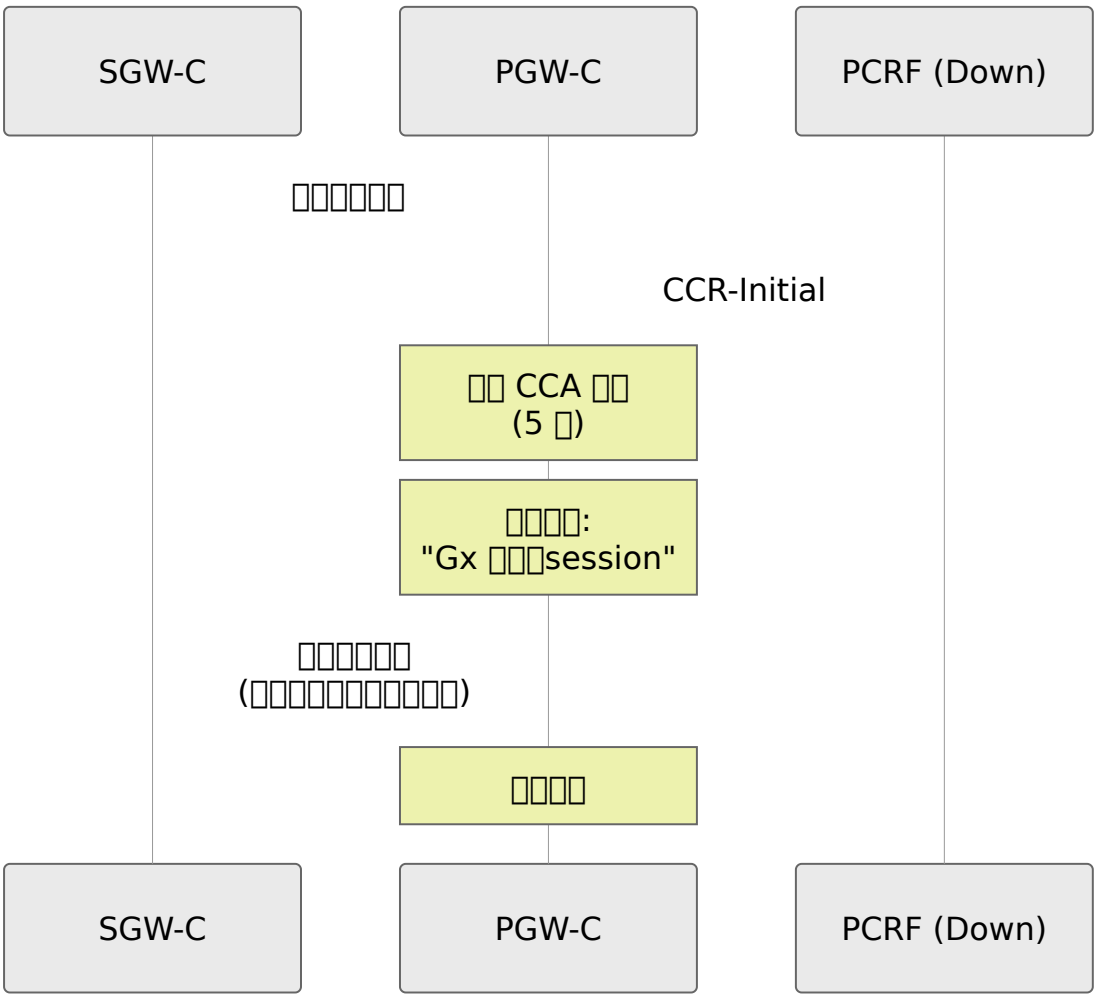

□□□□

□□□□

1. Diameter □□□□□□□□

□□□

- □□□“Diameter □□□□□□□”
- □□□ CCR-Initial

□□□□□□

- PCRF □□□
- □□□ PCRF IP □□□

- □□□□□ Diameter □□□3868□
- Diameter □□□□□/□□□□□□

□□□□□

```
# □□□□□□□
ping <pcrf_ip>

# □□ Diameter □□ (TCP 3868)
telnet <pcrf_ip> 3868

# □□ Diameter □□□□
# □□□□□□□□□ FQDN□□□□ IP
```

□□□□□

```
config :pgw_c,
  diameter: %{
    # □□□ FQDN□□□□ IP
    host: "pgw_c.epc.mnc999.mcc999.3gppnetwork.org",
    realm: "epc.mnc999.mcc999.3gppnetwork.org",
    peer_list: [
      %{
        host: "pcrf.epc.mnc999.mcc999.3gppnetwork.org",
        ip: "10.0.0.30"
      }
    ]
  }
```

2. CCR-Initial □□

□□□

- □□□□□□□□
- □□□“CCR-Initial □□”

□□□□□

- PCRF □□

- □□□□
- PCRF □□□□ Session-ID

□□□□□

1. □□ PCRF □□□□□□
2. □□ PCRF □□□□□□□□
3. □□□□□□□`ping <pcrf_ip>`
4. □□□□□□□□□□□□□□□

3. □□□ PCRF □□

□□□

- CCA-Initial □ Result-Code != 2001
- □□□□□□□□

□□□□□□□

□□□□	□□□□	□□□□
5030	IMSI □□□□□□□□	□ HSS/SPR □□□□□
5003	□□□□□	□□□□□□
4010	PCRF □□	□□□□□ PCRF □□

□□□□□

```
# PGW-C □□□□□
[error] Diameter Gx □□□Result-Code 5030 (DIAMETER_USER_UNKNOWN)
[error] IMSI 310260999999999 □ PCRF □□
```

4. QoS □□□

□□□

- □□□□□□ QoS □□

- □□□□□□□□□□□

□□□□□

1. □□ **CCA-Initial**□
    - □□ `QoS-Information` AVP □□□□
    - □□ `APN-Aggregate-Max-Bitrate-UL/DL` □
2. □□ **PFCP** □□□□□
    - □□ QER □□□□□□ MBR □□□
    - □□ PGW-U □□□□□ QER □□□□
3. □□ **PCRF** □□□
    - □□ PCRF □□
    - □□□□□□□□□□□□□□ QoS

5. Diameter □□□□

□□□

- Diameter □□□□□ PCRF
- □□□“□□□□□□□□□□□”

□□□

- □□□□□□□□□□□□□□□

□□□□□

□□□□□□

```
# □□□□□□□
config :pgw_c,
  diameter: %{
    realm: "epc.mnc999.mcc999.3gppnetwork.org",  # PGW-C □□□
    peer_list: [
      %{
        realm: "epc.mnc999.mcc999.3gppnetwork.org"  # PCRF □□□□□□□□
□□
      }
    ]
  }
```

□ CCR-Initial □□

```
Origin-Realm: "epc.mnc999.mcc999.3gppnetwork.org"
Destination-Realm: "epc.mnc999.mcc999.3gppnetwork.org"
```

□□ Gx □□

□□□□□

```
# Gx □□□□
rate(gx_inbound_messages_total{message_type="gx_CCA"}[5m])
rate(gx_outbound_messages_total{message_type="gx_CCR"}[5m])

# Gx □□□□
rate(gx_inbound_errors_total[5m])

# Gx □□□□□□□□□□□
sum(rate(gx_outbound_responses_total{result_code_class="2xxx"}
[5m])) /
sum(rate(gx_outbound_responses_total[5m])) * 100

# □ PCRF □□□ Gx □□□□
rate(gx_outbound_responses_total{result_code_class!="2xxx"}[5m])
by (diameter_host)

# Gx □□□□
session_id_registry_count

# Gx □□□□□□□□□
histogram_quantile(0.95,
rate(gx_inbound_handling_duration_bucket[5m]))
```

□□□□□□□□□□□□□□□

`gx_outbound_responses_total` □□□□□□□□□□ PCRF □□□□ Diameter □□□□□□□□□□□□□□□□□□□□

- **`message_type`**□□□□□□□□□`gx_RAA`□`gx_CCA`□
- **`result_code_class`**□□□□□□□□□`2xxx`□`3xxx`□`4xxx`□`5xxx`□
- **`diameter_host`**□□□□□□□ PCRF □□□

□□□□□□□□

- **2001**□DIAMETER_SUCCESS□ - □□□□
- **3001**□DIAMETER_COMMAND_UNSUPPORTED□ - □□□□
- **5012**□DIAMETER_UNABLE_TO_COMPLY□ - □□□□□□
- **5030**□DIAMETER_USER_UNKNOWN□ - □□□□□□

□□□□□

```yaml
# □ Gx □□□□□
- alert: GxErrorRateHigh
  expr: rate(gx_inbound_errors_total[5m]) > 0.1
  for: 5m
  annotations:
    summary: "□□□□ Gx □□□"

# □ Gx □□□□□□□
- alert: GxResponseFailureRate
  expr: |

sum(rate(gx_outbound_responses_total{result_code_class!="2xxx"}
[5m])) /
    sum(rate(gx_outbound_responses_total[5m])) > 0.1
  for: 5m
  annotations:
    summary: "□ Gx □□□□□"
    description: "□□ 10% □ Gx □□□□□"

# PCRF □□□□□□□
- alert: GxPCRFFailures
  expr:
rate(gx_outbound_responses_total{result_code_class=~"4xxx|5xxx"}
[5m]) by (diameter_host) > 0.05
  for: 3m
  annotations:
    summary: "PCRF {{ $labels.diameter_host }} □□□□□□"
    description: "□□□□□ PCRF □□"

# □□□□□□
- alert: GxSessionRejection
  expr: rate(gx_inbound_errors_total{result_code="5030"}[5m]) >
0.01
  for: 5m
  annotations:
    summary: "PCRF □□□□□USER_UNKNOWN□"
```

□□□□

□□□□□ Diameter □□□

```
# config/runtime.exs
config :logger, level: :debug

# □□□□□□
iex> Logger.configure(level: :debug)
```

□□□

- `[debug] □□ CCR-Initial□Session-ID: ...`
- `[debug] □□ CCA-Initial: Result-Code 2001`
- `[error] Diameter □□: ...`

Diameter □□□□□

Diameter Gx □□□ PCRF □□□□□ **OAM REST API** □□□□□API □□ HTTPS/TLS □ `https://<host>:8443` □□□□□□□□ `/api` □□□□□□□□ API □□□Swagger UI□□□ `https://<host>:8443/api/docs` □□□

Diameter □□□□□

```
GET /api/diameter                     # □□□□□□□□□ + □□□□
GET /api/diameter?status=disconnected # □□□□□□□□
GET /api/diameter/<origin-host>       # □□ Origin-Host □□□□□□□□
```

□□□

```
curl -k https://localhost:8443/api/diameter
```

`GET /api/diameter` □□□□□□□□ Diameter □□□□□□□□□□□□□□□□ `?status=connected` □ `?status=disconnected` □□□□□□□□□□□□□□□□□□ Origin-Host □ `GET /api/diameter/<origin-host>` □□□□□□□□□□

□□□□□□□□□□□□□□□□□

□□	□□
`host`	□□□□ Diameter □□ (Origin-Host)
`status`	□□□□□□□□□□□□ / □□□ / □□□□□
`ip`	□□□ IP □□
`port`	□□□□□
`transport`	TCP □ SCTP
`connection_initiation`	OmniPGW □□□□□□□□□□□□□□□□□□□
`realm`	□□□□ CEA □□□□ Diameter □□
`product_name`	□□□□ CEA □□□□□□□□□□□
`application_ids`	□ CEA □□□□ Diameter □□ ID□Gx = 16777238□

□□□□□□□□□□□□ PCRF □□□□ □□□□□□ Gx □□□□□□□□□□□□□□□□□□□□□□□□□□□

□□□□

□□ **PCRF** □□□□

```
curl -k https://localhost:8443/api/diameter
```

□□□□ PCRF □□□□□□ `□□□`□`connection_initiation` □□□□□□□□ `application_ids` □ □ Gx□16777238□□

□□□□□□□□□□□□**Gx** □□□□ □□□□□□ "PCRF □□" □□□□□□□□□□□□□□□□□□

```
curl -k https://localhost:8443/api/diameter/<origin-host>
```

- `status` □ `□□□` → □□□□□□□□□ PCRF □□□□□□□□□□□□□□□□□□ TCP 3868□

- `status` □ `□□□` □□□□□□□□ → □□□□□□□□□□□□□□□□PCRF □□□□□□□□□

□□ **Diameter** □□□ □□□□□□ PCRF □□□□□□□□□□□□□□□ `□□□`□

```
curl -k https://localhost:8443/api/diameter/<origin-host>
```

□□ `realm` □□□□□□□□□`application_ids` □□□□ Gx□□□ `product_name` □□□□□□□□ PCRF □□□□

□□□□□□□□ □□ PCRF □□□□`GET /api/diameter?status=disconnected` □□□□ `□□□`□□□□ □ PCRF □□ `□□□`□□□□□□□□□□□□□□□□□□□□□□□□□ `status` □□□ `□□□`□

□□ **Diameter** □□□□□

- □□□□□□□ `□□□` □ `realm` □□
- `application_ids` □□□ Gx□16777238□
- `product_name` □□□□ PCRF □□□

□□□□□□□□ □□ `connection_initiation` □□□□□□□□□□□□□□□□□□ `initiate_connection: true`□□□□□□□□□□□□□□□□□□□□□□□□□□□□

□□□□□

OAM API □□□□□□□□□□□□□□ Prometheus □□□□□

- □□ Gx □□□
- CCR/CCA □□□□
- □□□□

`GET /api/diameter` □□“□□□□□□□□□□”□□□□□“□□□□□□□□□□□□□□□□□”

□□□□

□□□□□

- □□□□ - Diameter □□□PCRF □□□□□
- **PFCP □□** - □□ PCC □□□ QER □□ QoS □□
- □□□□ - □□□□□□□□□□□□
- **QoS □□□□□** - □□□ QoS □□□□□□□

□□□□

- **Diameter Gy □□** - □□ PCC □□□□□□□□□
- **□□ CDR □□** - □□□□□□□□□□□□□
- **PCO □□** - IMS □□□□□ P-CSCF □□

□□

- □□□□ - Gx □□□□□□□□PCRF □□□□
- **S5/S8 □□** - □□□□□□□□□□

□□□□□□

Diameter □□□□ (Gy/Ro □ □)

□□□□□□□ (OCS) □□

□□

1. □□
2. 3GPP □□□□
3. Gy/Ro □□□□
4. □□□□□□□
5. □□□□□□□
6. □□□□□□□
7. □□□□□□□□□
8. □□
9. □□□□
10. □□□□
11. □ Gx □□□
12. □□□□

□□

Gy □□□□ IMS □□□□□□□□ **Ro** □□□□ PGW-C □□□ □□□□□□□ **(OCS)** □□□□□□□□□□□□□□□□□

- □□□□□□ - □□□□□□□□□□□
- □□□□□□□ - □□□□□□□□□□□□
- □□□□□□□□□ - □□□□□□□□□□□□□□□□
- □□□□□□□ - □□□□□□□□□
- □□□□□ - □□□□□□□□□□□

□□□□□□□

□□	□□□□ **(Gy/Ro)**	□□□□ **(Gz/Rf)**
□□	□□□□□□□	□□□□□
□□	□□□□□□	□□□□□
□□□□	□□□□□□□□□	□□□□□□□□□
□□	OCS (□□□□□□□)	CGF/CDF (□□□□□□□)
□□	□□□□□□	□□□□□□□□□□
□□□	□□□□□□□□	□□□□□□□□
□□□□	□□□□□□□□□□□□	□□□□□□□

□□□ □□ CDR □□ □□□□□□□□□□□□□□□□□□□□

□□□ □□□□ □□□□□□□ PDN □□□□□□□□□□□□□□□

□□□□□□ Gy

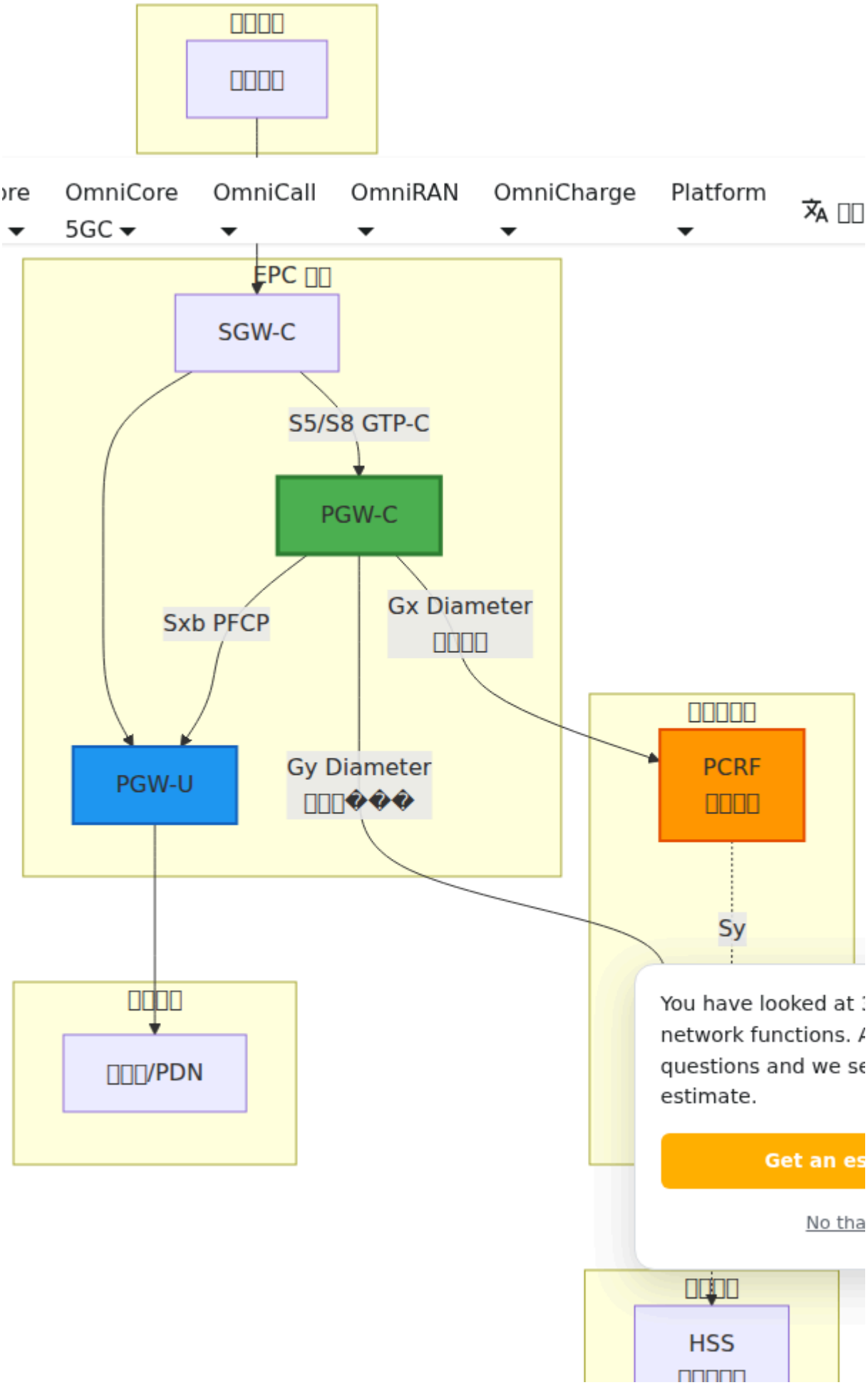
□□□□
□□□□
ore
OmniCore
5GC
OmniCall
OmniRAN
OmniCharge
Platform
□□
EPC □□
SGW-C
S5/S8 GTP-C
PGW-C
Sxb PFCP
Gx Diameter
□□□□
PGW-U
Gy Diameter
□□□□□□
□□□□□
PCRF
□□□□
Sy
□□□□
□□□/PDN
You have looked at
network functions. A
questions and we se
estimate.
Get an es
No tha
□□□□
HSS
□□□□□

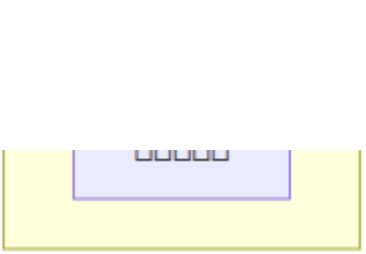

□□□□

□□	□□
□□□□	□□□□□□□□□ OCS □□□□
□□□□	□□□□□□□□□□□□□□□□□□□□
□□□□□□	□□□□□□□
□□□□	□□□□□□□□□□□□
□□□□	□□□□□□□□□□
□□□□	□□□□□□□□□□□□□□

3GPP □□□□

□□□□□

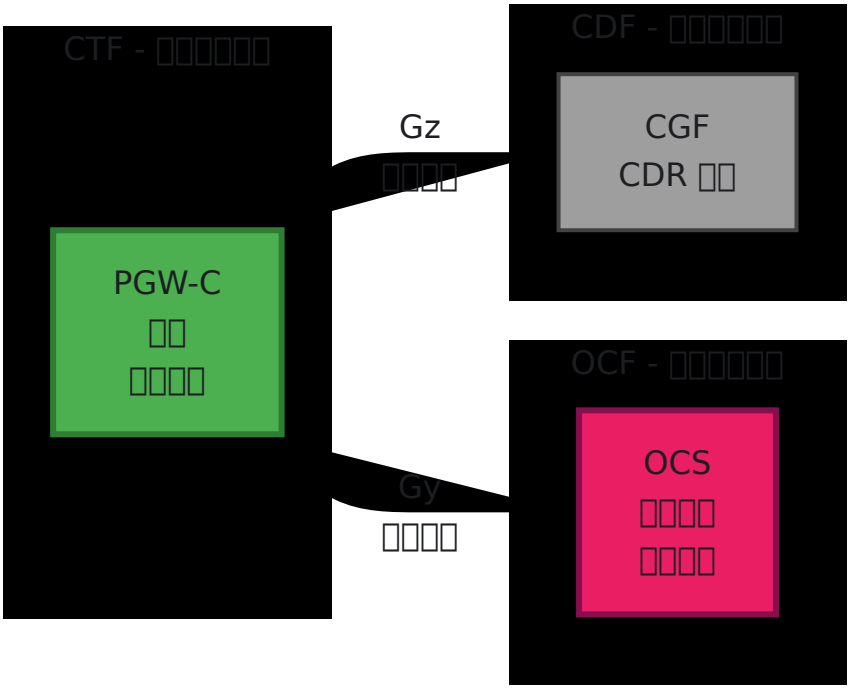

□□□□□□□ (CTF)

PGW-C □□ **CTF (□□□□□□□)**□□□□

1. □□□□□□□□ - □□□□□□□□□□□□□□□□
2. □□□□□□□ - □□□□□□□□
3. □□□□□□□ - □□□□□□□□
4. □□□□□□□ - □□□□□□□
5. □□□□□□□ - □□□□□□□□□□□

□□□□□□□ (OCF)

OCS □□ **OCF (□□□□□□□)**□

1. □□□□□□□ - □□□□□□□
2. □□ - □□□□□□□□□□ MB□□□□□
3. □□□□ - □□□□□□□□□□

Powered by TCPDF (www.tcpdf.org)

4. □□□□ - □□□□□□□□□
5. □□□□ - □□□□□□□□□□

Gy/Ro □□□□

3GPP □□

- □□□ 3GPP TS 32.299 (□□□□)
- □□□ 3GPP TS 32.251 (PS □□□)
- **Diameter** □□ **ID**□ 4 (Gy/Ro - □□□□□□)
- □□□□□ RFC 4006 (Diameter □□□□□□)

□□□□

□□□□□□□□□ UE PDN □□□□□□□ **Session-ID** □□□ **Gy/Ro** □□□□□□□

- □□□□□□□□□□□□ (CCR-Initial)
- □□□□□□□□□ (CCR-Update)
- □□□□□□□□ (CCR-Termination)

□□ ID □□

```
Session-ID: <Origin-Host>;<high32>;<low32>[;<optional>]
□□: omni-
pgw_c.epc.mnc999.mcc999.3gppnetwork.org;9876543210;12345;gy
```

□□□

- **Origin-Host:** PGW-C □ Diameter □□
- **high32:** □□□□□□□ 32 □
- **low32:** □□□□□□□ 32 □
- **optional:** □□□□□□□□□“gy”□□□ Gx□

□□□□□□□

□□□□

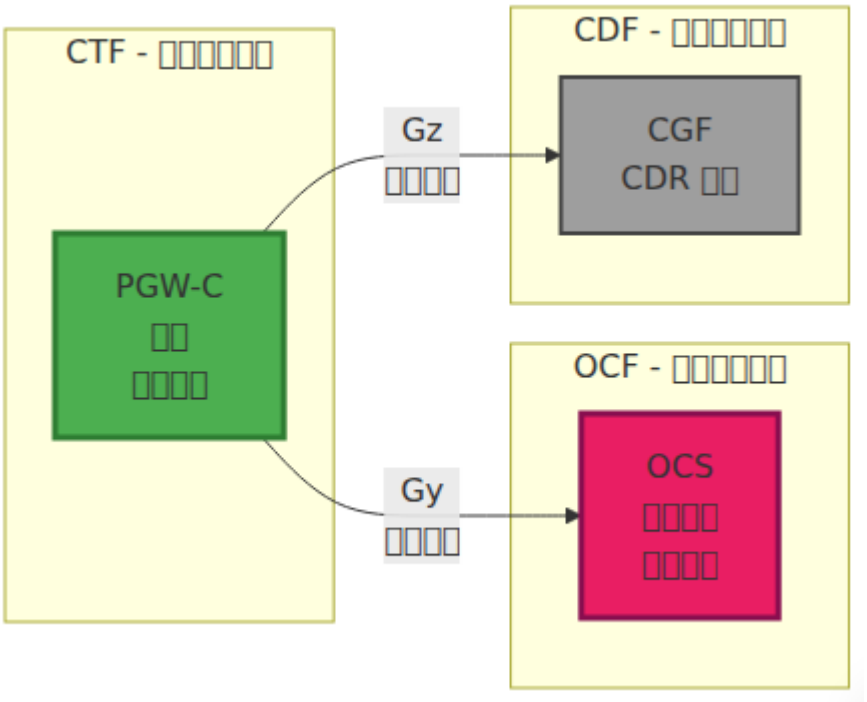

CCR-Initial (□□□□□□□ - □□)

□□□ UE □□ PDN □□□□□□□□□□□□□□

□□□

- □ OCS □□□□□□□□□
- □□□□□□□□□□
- □□ Gy/Ro □□

PGW-C □□□□□ AVP□

AVP □□	AVP □□	□□	□□
Session-Id	263	UTF8String	□□□ Gy □□□□□
Auth-Application-Id	258	Unsigned32	4 (□□□□)
Origin-Host	264	DiamIdent	PGW-C □ Diameter □□
Origin-Realm	296	DiamIdent	PGW-C □ Diameter □□
Destination-Realm	283	DiamIdent	OCS □□□
CC-Request-Type	416	Enumerated	1 = INITIAL_REQUEST
CC-Request-Number	415	Unsigned32	□□□□□ 0 □□□
Subscription-Id	443	Grouped	UE □□□ (IMSI/MSISDN)
Service-Context-Id	461	UTF8String	□□□□□□□□
Multiple-Services-Credit-Control	456	Grouped	□□□□□□□□□
Requested-Service-Unit	437	Grouped	□□□□□□□□□□□□□
Used-Service-Unit	446	Grouped	□□□□□□□□□□ 0□
Service-Identifier	439	Unsigned32	□□□□□□□
Rating-Group	432	Unsigned32	□□□□□□□

□□ CCR-I □□□

```
CCR (□□□□: 272, □□)
├── Session-Id: "pgw_c.example.com;123;456;gy"
├── Auth-Application-Id: 4
├── Origin-Host: "omni-pgw_c.epc.mnc999.mcc999.3gppnetwork.org"
├── Origin-Realm: "epc.mnc999.mcc999.3gppnetwork.org"
├── Destination-Realm: "epc.mnc999.mcc999.3gppnetwork.org"
├── CC-Request-Type: INITIAL_REQUEST (1)
├── CC-Request-Number: 0
├── Subscription-Id (□□)
│   ├── Subscription-Id-Type: END_USER_IMSI (1)
│   └── Subscription-Id-Data: "310260123456789"
├── Subscription-Id (□□)
│   ├── Subscription-Id-Type: END_USER_E164 (0)
│   └── Subscription-Id-Data: "15551234567"
├── Service-Context-Id: "32251@3gpp.org"
├── Multiple-Services-Credit-Control (□□)
│   ├── Service-Identifier: 1
│   ├── Rating-Group: 100
│   └── Requested-Service-Unit (□□)
│       └── CC-Total-Octets: 10000000 (□□ 10 MB)
└── Used-Service-Unit (□□)
    └── CC-Total-Octets: 0 (□□□□)
```

CCA-Initial (□□□□□□ - □□)

□□□□ OCS □ CCR-I □□□

□□□

- □□□□□□□□□□
- □□□□□□□□□□
- □□□□□□□□□□

PGW-C □□□□□ AVP□

AVP □□	AVP □□	□□
Result-Code	268	□□ (2001) □□□□□
Multiple-Services-Credit-Control	456	□□□□□□□□□□
Granted-Service-Unit	431	□□□□□□□□□□□□□□
Validity-Time	448	□□□□□□□□
Result-Code	268	□□□□□□□□
Final-Unit-Indication	430	□□□□□□□□□
Volume-Quota-Threshold	-	□□□□□□□

□□□□□□

```
CCA (□□□□: 272, □□)
├── Session-Id: "pgw_c.example.com;123;456;gy"
├── Result-Code: DIAMETER_SUCCESS (2001)
├── Origin-Host: "ocs.example.com"
├── Origin-Realm: "example.com"
├── Auth-Application-Id: 4
├── CC-Request-Type: INITIAL_REQUEST (1)
├── CC-Request-Number: 0
└── Multiple-Services-Credit-Control (□□)
    ├── Result-Code: DIAMETER_SUCCESS (2001)
    ├── Service-Identifier: 1
    ├── Rating-Group: 100
    ├── Granted-Service-Unit (□□)
    │   └── CC-Total-Octets: 10000000 (□□ 10 MB)
    ├── Validity-Time: 3600 (□□□□□□ 1 □□)
    └── Volume-Quota-Threshold: 8000000 (□□□ 8 MB □□□□□□80%)
```

CCR-Update (□□□□□□ - □□)

□□□

- □□□□□□□□□□□□□□□□□ 80%□
- □□□□□
- □□□□□□□□□□
- □□□□□□□

□□□

- □□□□□□□
- □□□□□□□□□□□□□□□
- □□□□□□□

□ CCR-I □□□□□□

- `CC-Request-Type: UPDATE_REQUEST (2)`
- `CC-Request-Number` □□
- `Used-Service-Unit` □□□□□□□□□
- `Requested-Service-Unit` □□□□□□

□□ CCR-U □□□

```
CCR (□□□□: 272, □□)
├── Session-Id: "pgw_c.example.com;123;456;gy"
├── Auth-Application-Id: 4
├── Origin-Host: "omni-pgw_c.epc.mnc999.mcc999.3gppnetwork.org"
├── Origin-Realm: "epc.mnc999.mcc999.3gppnetwork.org"
├── Destination-Realm: "epc.mnc999.mcc999.3gppnetwork.org"
├── CC-Request-Type: UPDATE_REQUEST (2)
├── CC-Request-Number: 1
└── Multiple-Services-Credit-Control (□□)
    ├── Service-Identifier: 1
    ├── Rating-Group: 100
    ├── Used-Service-Unit (□□)
    │   └── CC-Total-Octets: 8000000 (□□□□□ 8 MB)
    └── Requested-Service-Unit (□□)
        └── CC-Total-Octets: 10000000 (□□□ 10 MB)
```

CCA-Update (□□□□□□□ - □□)

□□□□ OCS □ CCR-U □□□

□□□

- □□□□□□□□□□□□□□□□□□□
- □□□□□□□
- □□□□□□□

□□□□□□□

1. □□□□□□□□

```
CCA (□□)
└── Multiple-Services-Credit-Control
    ├── Result-Code: DIAMETER_SUCCESS (2001)
    ├── Granted-Service-Unit
    │   └── CC-Total-Octets: 10000000 (□ 10 MB)
    └── Validity-Time: 3600
```

2. □□□□□□□□□□□□

```
CCA (□□)
└── Multiple-Services-Credit-Control
    ├── Result-Code: DIAMETER_SUCCESS (2001)
    ├── Granted-Service-Unit
    │   └── CC-Total-Octets: 1000000 (□□ 1 MB)
    └── Final-Unit-Indication
        └── Final-Unit-Action: TERMINATE (0)
```

3. □□□□□□□□

```
CCA (□□)
├── Result-Code: DIAMETER_CREDIT_LIMIT_REACHED (4012)
└── Multiple-Services-Credit-Control
    ├── Result-Code: DIAMETER_CREDIT_LIMIT_REACHED (4012)
    └── Final-Unit-Indication
        └── Final-Unit-Action: TERMINATE (0)
```

CCR-Termination (□□□□□□ - □□)

□□□

- UE □□
- PDN □□□□□
- □□□□□□□□□□

□□□

- □□□□□□□
- □□ Gy/Ro □□
- □□□□

□□□□□

- `CC-Request-Type: TERMINATION_REQUEST (3)`
- `Used-Service-Unit` □□□□□□□□□
- □ `Requested-Service-Unit`□□□□□□□□□
- □□ `Termination-Cause`

□□ **CCR-T** □□□

```
CCR (□□□□: 272, □□)
├── Session-Id: "pgw_c.example.com;123;456;gy"
├── Auth-Application-Id: 4
├── Origin-Host: "omni-pgw_c.epc.mnc999.mcc999.3gppnetwork.org"
├── Origin-Realm: "epc.mnc999.mcc999.3gppnetwork.org"
├── Destination-Realm: "epc.mnc999.mcc999.3gppnetwork.org"
├── CC-Request-Type: TERMINATION_REQUEST (3)
├── CC-Request-Number: 5
├── Termination-Cause: DIAMETER_LOGOUT (1)
└── Multiple-Services-Credit-Control (□□)
    ├── Service-Identifier: 1
    ├── Rating-Group: 100
    └── Used-Service-Unit (□□)
        └── CC-Total-Octets: 18500000 (□□□ 18.5 MB)
```

CCA-Termination (□□□□□□ - □□)

□□□□ OCS □ CCR-T □□□

□□□

- □□□□□□□
- □□□□
- □□□□□□□□

□□ **CCA-T**□

```
CCA (□□□□: 272, □□)
├── Session-Id: "pgw_c.example.com;123;456;gy"
├── Result-Code: DIAMETER_SUCCESS (2001)
├── Origin-Host: "ocs.example.com"
├── Origin-Realm: "example.com"
├── Auth-Application-Id: 4
├── CC-Request-Type: TERMINATION_REQUEST (3)
└── CC-Request-Number: 5
```

□□□□□□

□□□□□□

OCS □□□□□□□□□□□□□□

□□□□	**AVP**	□□	□□
□□	CC-Time	□	□□□□□□□□□□□□
□□	CC-Total-Octets	□□□□□□+□□	□□□□
□□□□□□	CC-Input-Octets, CC-Output-Octets	□□□□□□	□□□□□
□□□□	CC-Service-Specific-Units	���□□□□	□□□□□□API □□
□□	-	□□□□	□□□□□□□

□□□□□□

□□□ PGW-C □□□□□□□□□□□□□□

□□□□□ OCS □□ **Volume-Quota-Threshold** □ **Time-Quota-Threshold**□PGW-C □□ □ PGW-U □ PFCP □□□□□□□□□□□□ PFCP □□□□

□□□□□

```
1. OCS □□ 10 MB □□□□□□□ 80%□8 MB□
2. PGW-C □□ PGW-U □□□□□□□□□□□□□PFCP □□□□□□
3. □□□□□□ 8 MB□
   → PGW-C □□ CCR-Update
   → □□□□□□□□□□□□□□□□
4. OCS □□□□□□□
5. □□□□□□ CCR-Update □□□□□□□□
   → PGW-C □□□□□□□
```

□□□□□

```
Granted-Service-Unit: 10000000 □□ (10 MB)
Volume-Quota-Threshold: 8000000 □□ (8 MB)

□ 8 MB □□□ → □□ CCR-Update
□□□□□□: 2 MB (□□ OCS □□□□□□)
```

PGW-C □□□

PGW-C □□ PGW-U □ **PFCP** □□□□ □□□□□□□□

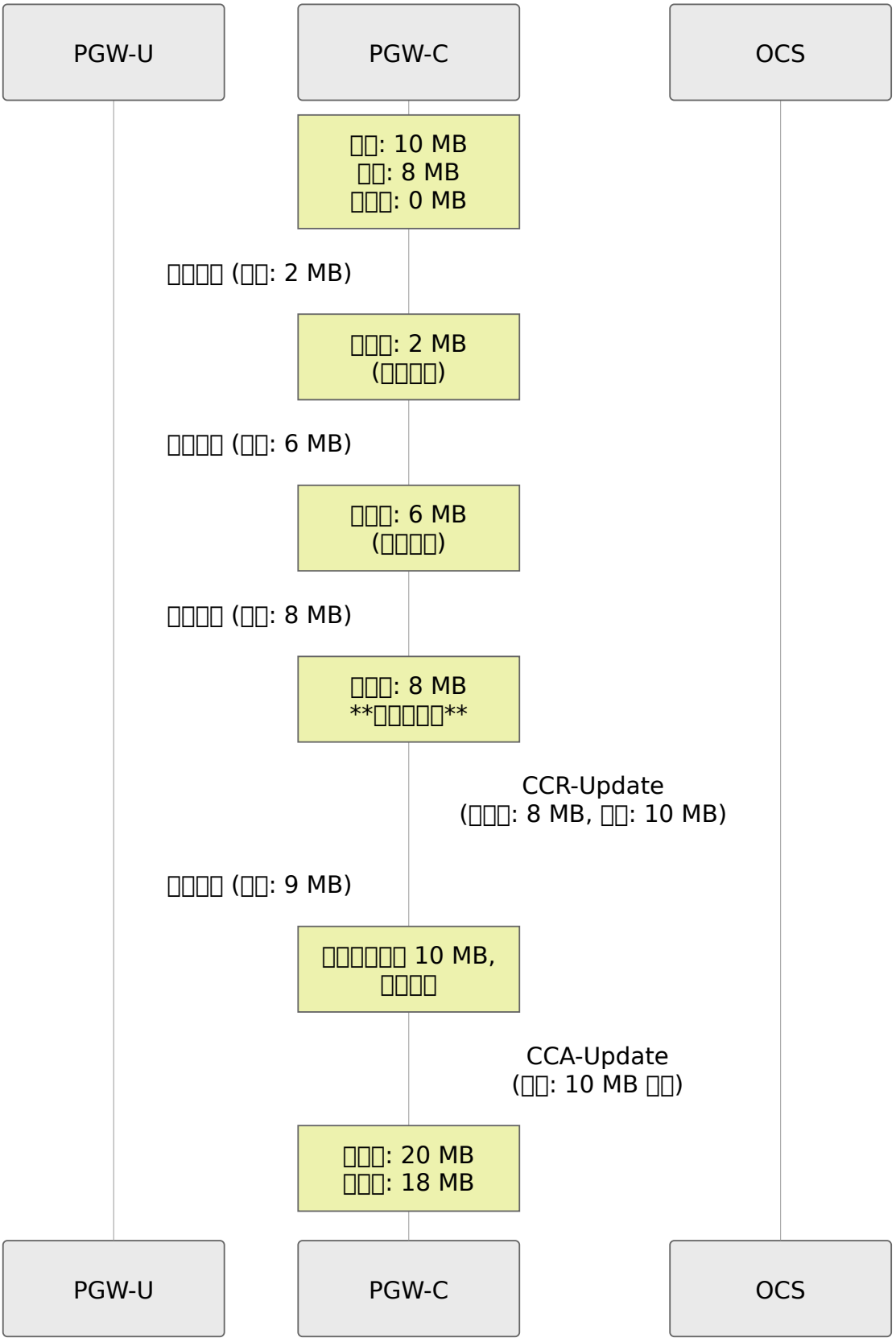
PGW-U
PGW-C
OCS
□□: 10 MB
□□: 8 MB
□□□: 0 MB
□□□□ (□□: 2 MB)
□□□: 2 MB
(□□□□)
□□□□ (□□: 6 MB)
□□□: 6 MB
(□□□□)
□□□□ (□□: 8 MB)
□□□: 8 MB
□□□□□
CCR-Update
(□□□: 8 MB, □□: 10 MB)
□□□□ (□□: 9 MB)
□□□□□□□ 10 MB,
□□□□
CCA-Update
(□□: 10 MB □□)
□□□: 20 MB
□□□: 18 MB
PGW-U
PGW-C
OCS

□□□□□□

□□□□□□□□□□□□□□

OCS □ CCA □□□ **Final-Unit-Indication** AVP □□□□□□

Final-Unit-Action	□	PGW-C □□
TERMINATE	0	□□□□□□□□□□□□□□□
REDIRECT	1	□□□□□□□□□□□□□□□□□□□□
RESTRICT_ACCESS	2	□□□□□□□□□□□□□□□□□□□□

□□□□□□□□□□□□□

```
CCA (□□)
└── Multiple-Services-Credit-Control
    ├── Result-Code: DIAMETER_SUCCESS (2001)
    ├── Granted-Service-Unit
    │   └── CC-Total-Octets: 1000000 (□□ 1 MB)
    └── Final-Unit-Indication
        ├── Final-Unit-Action: REDIRECT (1)
        └── Redirect-Server (□□)
            ├── Redirect-Address-Type: URL (2)
            └── Redirect-Server-Address:
"http://topup.example.com"
```

PGW-C □□□

1. **TERMINATE:** □□ CCR-T□□□□□
2. **REDIRECT:** □□ PFCP □□□ HTTP □□□□□□ URL
3. **RESTRICT_ACCESS:** □□ PFCP □□□□□□□□ IP

□□□□□□

□□□□□□□□□□□□

3GPP □□□ TS 23.203, TS 29.212, TS 32.251

□□□□□ PCRF □□ Gx □□□□□ **PCC** □□ □□□□□□□□ PCC □□□□□□□□ Diameter Gx □□□

□□□□□□□

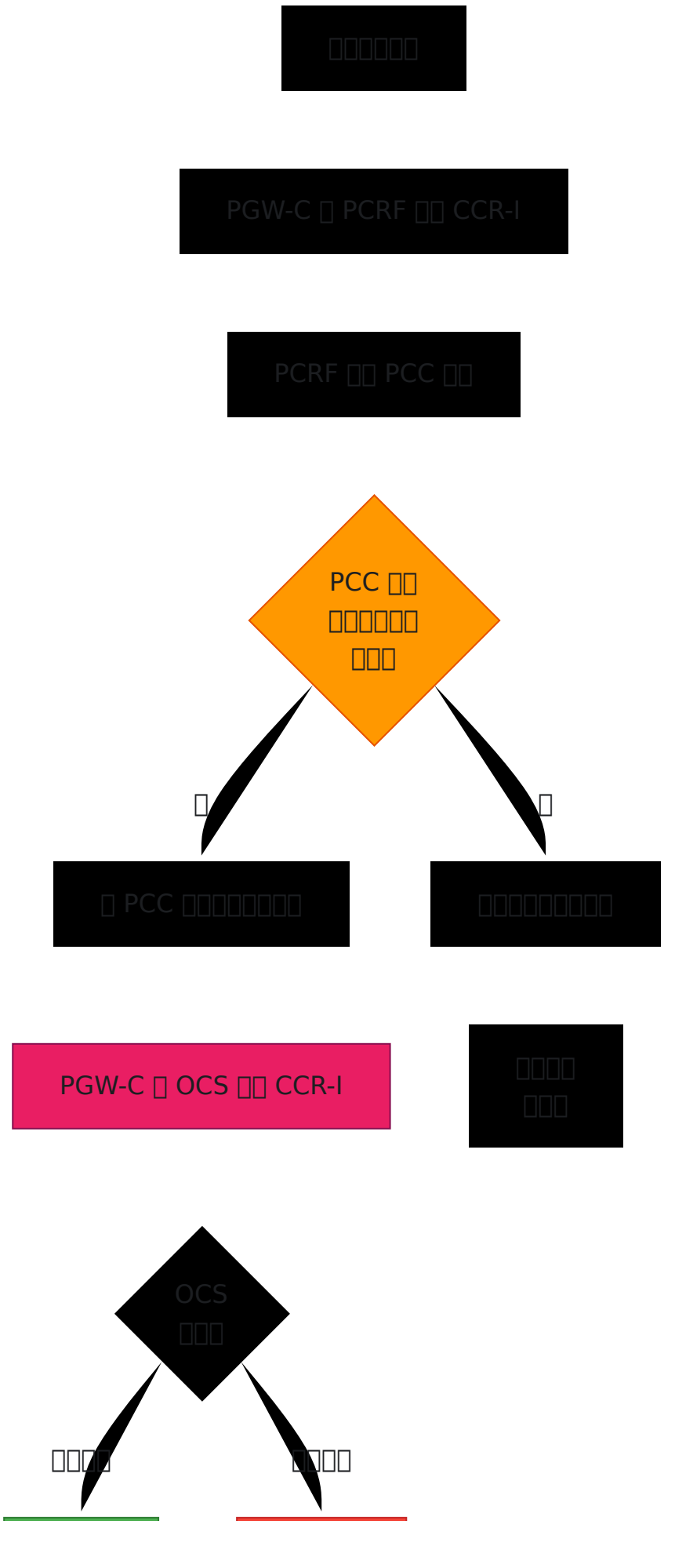
PGW-C 向 PCRF 发起 CCR-I
PCRF 向 PCC 决策
PCC 决策
是
否
PGW-C 向 OCS 发起 CCR-I
OCS
决策

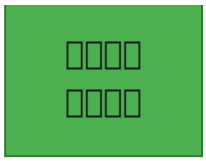

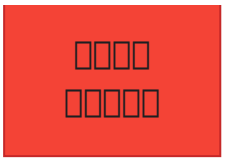



□□□□□□□ PCC □□

PCRF □□ (Gx □□ CCA-I)□

```
CCA (Gx □□)
└── Charging-Rule-Definition (□□)
    ├── Charging-Rule-Name: "prepaid_data_rule"
    ├── Rating-Group: 100
    ├── Online: 1 (□□□□□□)
    ├── Offline: 0 (□□□□□□)
    ├── Metering-Method: VOLUME (1)
    ├── Precedence: 100
    ├── Flow-Information: [...]
    └── QoS-Information: [...]
```

PCC □□□□□□□□ AVP□

AVP □□	AVP □□	□	□□
Rating-Group	432	Unsigned32	□□□□□□□□ OCS □□□□□
Online	1009	0=□□, 1=□□	□□□□□□ (Gy)
Offline	1008	0=□□, 1=□□	□□□□□□ (Gz)
Metering-Method	1007	0=□□, 1=□□, 2=□□	□□□□
Reporting-Level	1011	0=□□, 1=□□□	□□□□□□□

□□□□□□□□□

□□	□□	□□□	□□
1	0	□□	□□□□□□□□□□□□
0	1	□□	□□□□□□□□□□□□
1	1	□□	□□□□□□□□□□□□□□□□
0	0	-	□□□□□□□□□□

□□□□□

□□ PDN □□□□□□ □□□□□□□□□□□□□□□□

□□□□□□

```
□□□□□□□□□□□□
├── □□□□□100□□□□□□□
└── □□□1

□□□□□ 1□□□□□□
├── □□□□□200□□□□□□□
└── □□□1

□□□□□ 2□IMS □□□
├── □□□□□300□□□□□
└── □□□1
```

PGW-C Gy □□□

- □□ **CCR-I** □□□□□ MSCC□□□□□□□□□□□□□□□

```
CCR-□□
├── □□ ID: "..."
└── □□□□□□□□
    ├── [□□□□100] → □□□□
    ├── [□□□□200] → □□□□
    └── [□□□□300] → □□
```

OCS □□□

```
CCA-□□
└── □□□□□□□□
    ├── [□□□□100] → □□□10 MB
    ├── [□□□□200] → □□□5 MB□□□□□□
    └── [□□□□300] → □□□60 □
```

□□□□□□□

PGW-C □□□□□□□□□□□□□

```
# □□□
state.charging_quotas = %{
  100 => %{granted: 10_000_000, used: 0, threshold: 8_000_000},
  200 => %{granted: 5_000_000, used: 0, threshold: 4_000_000},
  300 => %{granted: 60_000, used: 0, threshold: 48_000}  # □□
}
```

□□□□□□□□□□□

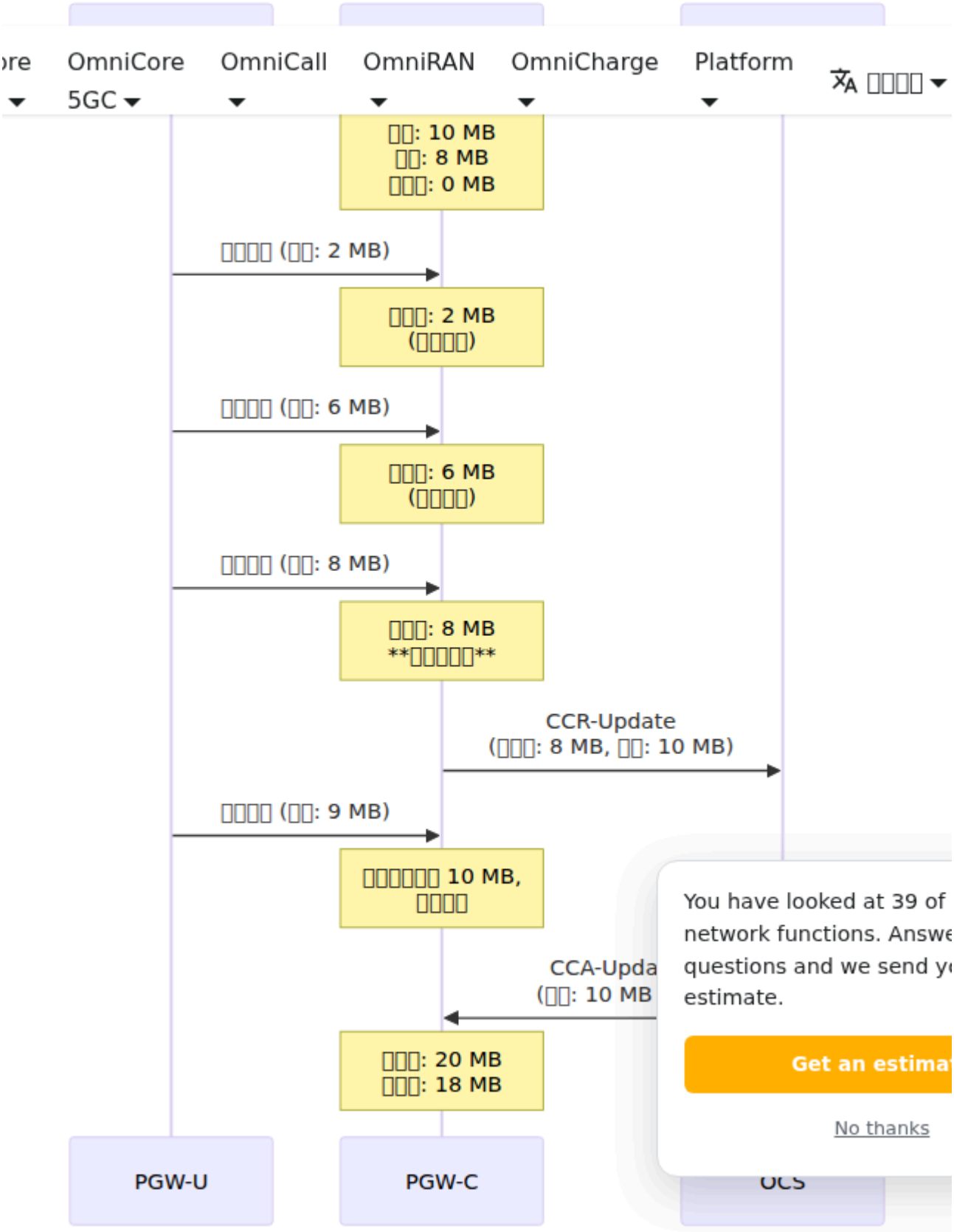
ore
OmniCore 5GC
OmniCall
OmniRAN
OmniCharge
Platform
□□□□□
□□: 10 MB
□□: 8 MB
□□□: 0 MB
□□□□ (□□: 2 MB)
□□□: 2 MB
(□□□□)
□□□□ (□□: 6 MB)
□□□: 6 MB
(□□□□)
□□□□ (□□: 8 MB)
□□□: 8 MB
□□□□□
CCR-Update
(□□□: 8 MB, □□: 10 MB)
□□□□ (□□: 9 MB)
□□□□□□ 10 MB,
□□□□
CCA-Upda
(□□: 10 MB
□□□: 20 MB
□□□: 18 MB
PGW-U
PGW-C
OCS
You have looked at 39 of
network functions. Answe
questions and we send y
estimate.
Get an estima
No thanks

□□□□□□□□

MSCC□□□□□□□□□□□AVP

□□□ □□□□□□/□□□□□□□□□□□

□□□

```
□□□□□□□□□□□□□□AVP 456□
├── □□□□□□□□□□32□AVP 439□
├── □□□□□□□□32□AVP 432□
├── □□□□□□□□□□□□AVP 437□
│   ├── CC-□□□□□□32□AVP 420□
│   ├── CC-□□□□□□□□64□AVP 421□
│   ├── CC-□□□□□□□□64□AVP 412□
│   └── CC-□□□□□□□□64□AVP 414□
├── □□□□□□□□□□□AVP 446□
│   └── [□□□□□□□□□□□□□□□]
├── □□□□□□□□□□□AVP 431□
│   └── [□□□□□□□□□□□□□□□]
├── □□□□□□□□32□AVP 448□
├── □□□□□□□□32□AVP 268□
└── □□□□□□□□□□□AVP 430□
    └── □□□□□□□□□□□AVP 449□
```

□□□□□□□□□□

□□	□□□□□□	□□□
□□	□□□□□□□	□□□□□□□
□□	1=□□□2=□□□3=□□	100=□□□200=□□
□□	□□□□	□□□□
□□	□□	□□□□□
□□	□□□□□□□□ RG	OCS □□□□□□

□□□

```
□□□□□□□1□□□□□□□
├── □□□□100□□□□□□ - $0.01/MB□
└── □□□□200□□□□□□ - $0.05/MB□

□□□□□□□2□□□□
└── □□□□300□□□□□□ - $0.10/□□□
```

□□

□□ Gy □□

□□ `config/runtime.exs`□

```
config :pgw_c,
  gy: %{
    # □□□□□□□□□□□□□□
    enabled: true,

    # OCS □□□□□□□□□□
    timeout_ms: 5000,

    # □□□□□□□□□□□□□□□□ PCRF □□□
    default_requested_quota: 10_000_000,  # 10 MB

    # □□□□□□□□□□□□
    # (0.8 = □□□ 80% □□□□□□ CCR-□□)
    quota_threshold_percentage: 0.8,

    # OCS □□□□□□□□□
    # □□□:block, :allow
    timeout_action: :block,

    # OCS □□□□□□□□□□
    # □□□:terminate, :redirect
    no_credit_action: :terminate,

    # □□□□□ URL□□ no_credit_action: :redirect □□□□
    topup_redirect_url: "http://topup.example.com"
  },
  diameter: %{
    listen_ip: "0.0.0.0",
    host: "omni-pgw_c.epc.mnc999.mcc999.3gppnetwork.org",
    realm: "epc.mnc999.mcc999.3gppnetwork.org",

    # OCS □□□□
    peer_list: [
      # PCRF □□□□□□□□Gx□
      %{
        host: "pcrf.epc.mnc999.mcc999.3gppnetwork.org",
        realm: "epc.mnc999.mcc999.3gppnetwork.org",
        ip: "10.0.0.30",
        initiate_connection: true
      },
      # OCS □□□□□□□□Gy□
      %{
        host: "ocs.epc.mnc999.mcc999.3gppnetwork.org",
```

```
        realm: "epc.mnc999.mcc999.3gppnetwork.org",
        ip: "10.0.0.40",
        initiate_connection: true
      }
    ]
  }
```

□□□□□□

`enabled`

- `true`□□□□□□□□CCR □□□□□ OCS
- `false`□□□□□□□□□□□ Gy □□

`timeout_ms`

- □□ OCS □ CCA □□□□□
- □□□3000-5000 □□

`default_requested_quota`

- □□ PCRF □□□□□□□□□□□□
- □□□□1-100 MB

`quota_threshold_percentage`

- □□□□ % □□□□□□ CCR-□□
- □□□0.75-0.85□75%-85%□
- □□ = □□□□□□□□□□□□□
- □□ = □□□□□□□□□

`timeout_action`

- **`:block`** - □□ OCS □□□□□□□□□□□□□□□□□□□□□□□□
- **`:allow`** - □□ OCS □□□□□□□□□□□□□□□□□□□□□□□□□

`no_credit_action`

- **`:terminate`** - □□□□□□□□□□

- `:redirect` - □□□□□□□□□

□□□□□□

□□□□□□□□□□□

```
config :pgw_c,
  gy: %{
    enabled: true,
    timeout_action: :block,
    no_credit_action: :terminate,
    quota_threshold_percentage: 0.8
  }
```

□□/□□□

```
config :pgw_c,
  gy: %{
    enabled: false  # □□□□□
  }
```

□□□□□□□□□□□□□□□□□□

```
config :pgw_c,
  gy: %{
    enabled: true,  # □ PCRF □□□□□
    timeout_action: :allow,  # OCS □□□□□□□□□
    no_credit_action: :terminate
  }
```

□□□

□□□□□□□□□□

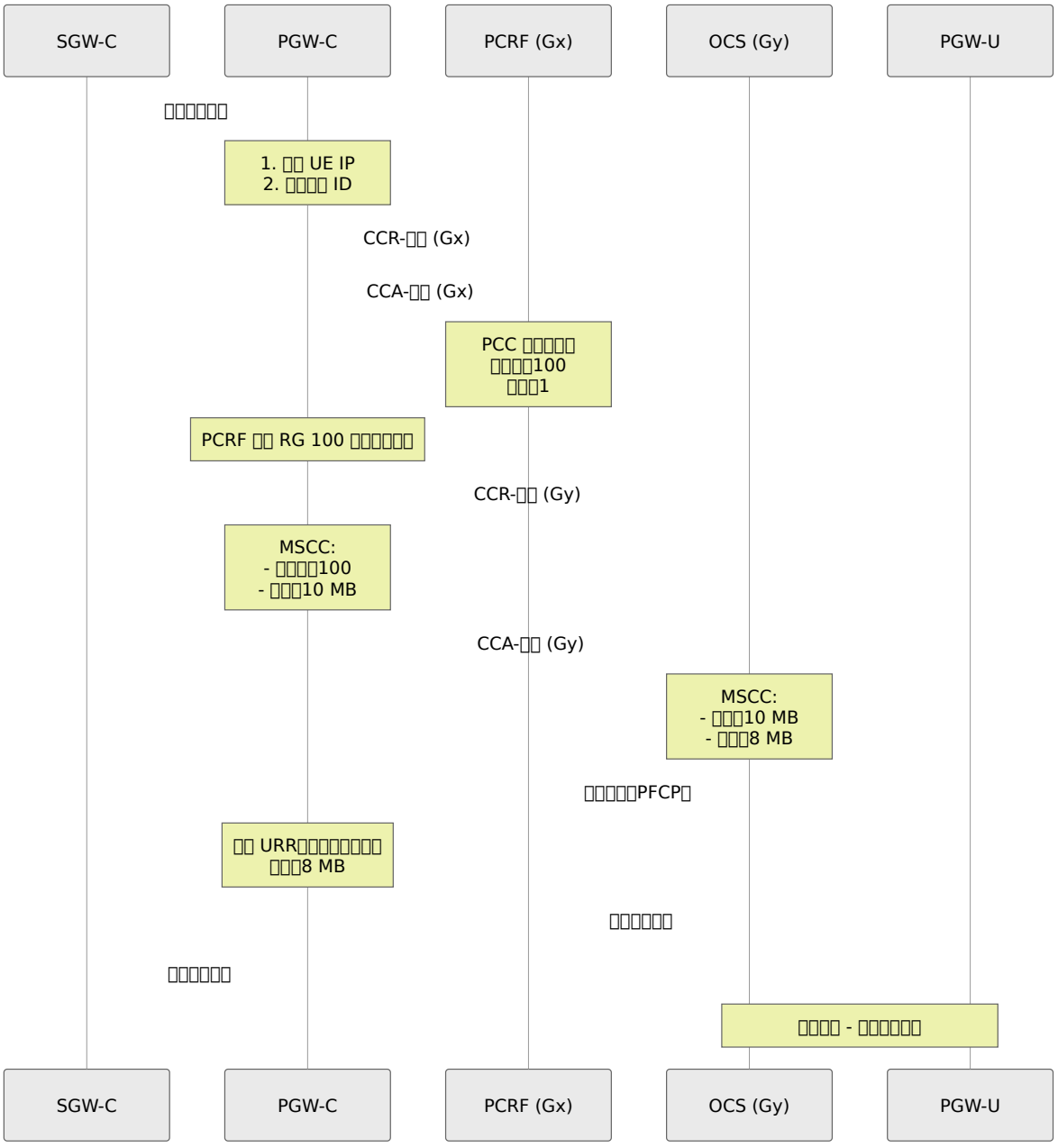
SGW-C
PGW-C
PCRF (Gx)
OCS (Gy)
PGW-U
□□□□□□□
1. □□ UE IP
2. □□□□ ID
CCR-□□ (Gx)
CCA-□□ (Gx)
PCC □□□□□
□□□□100
□□□1
PCRF □□ RG 100 □□□□□□
CCR-□□ (Gy)
MSCC:
- □□□□100
- □□□10 MB
CCA-□□ (Gy)
MSCC:
- □□□10 MB
- □□□8 MB
□□□□□PFCP□
□□ URR□□□□□□□□
□□□8 MB
□□□□□□□
□□□□□□□
□□□□ - □□□□□□□
SGW-C
PGW-C
PCRF (Gx)
OCS (Gy)
PGW-U

□□□□□□□□CCR-□□□

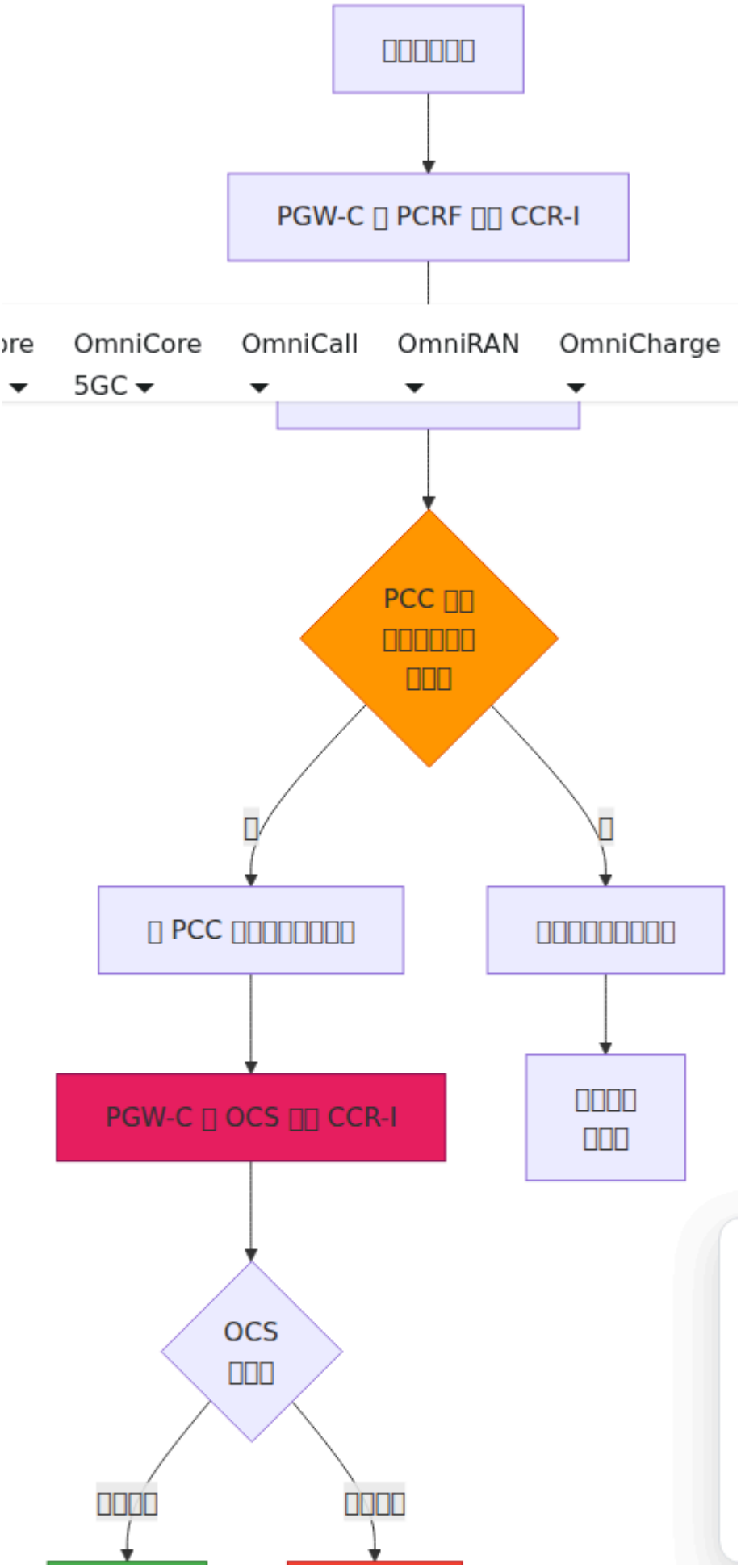
□□□□□□□
PGW-C □ PCRF □□ CCR-I
ore
OmniCore
5GC
OmniCall
OmniRAN
OmniCharge
PCC □□
□□□□□□□
□□□
□
□
□ PCC □□□□□□□□□
□□□□□□□□□□
PGW-C □ OCS □□ CCR-I
□□□□
□□□
OCS
□□□
□□□□□
□□□□□

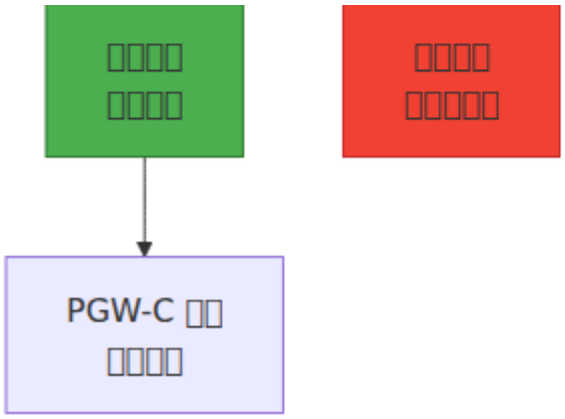
PGW-C

□□□□□□□□□□

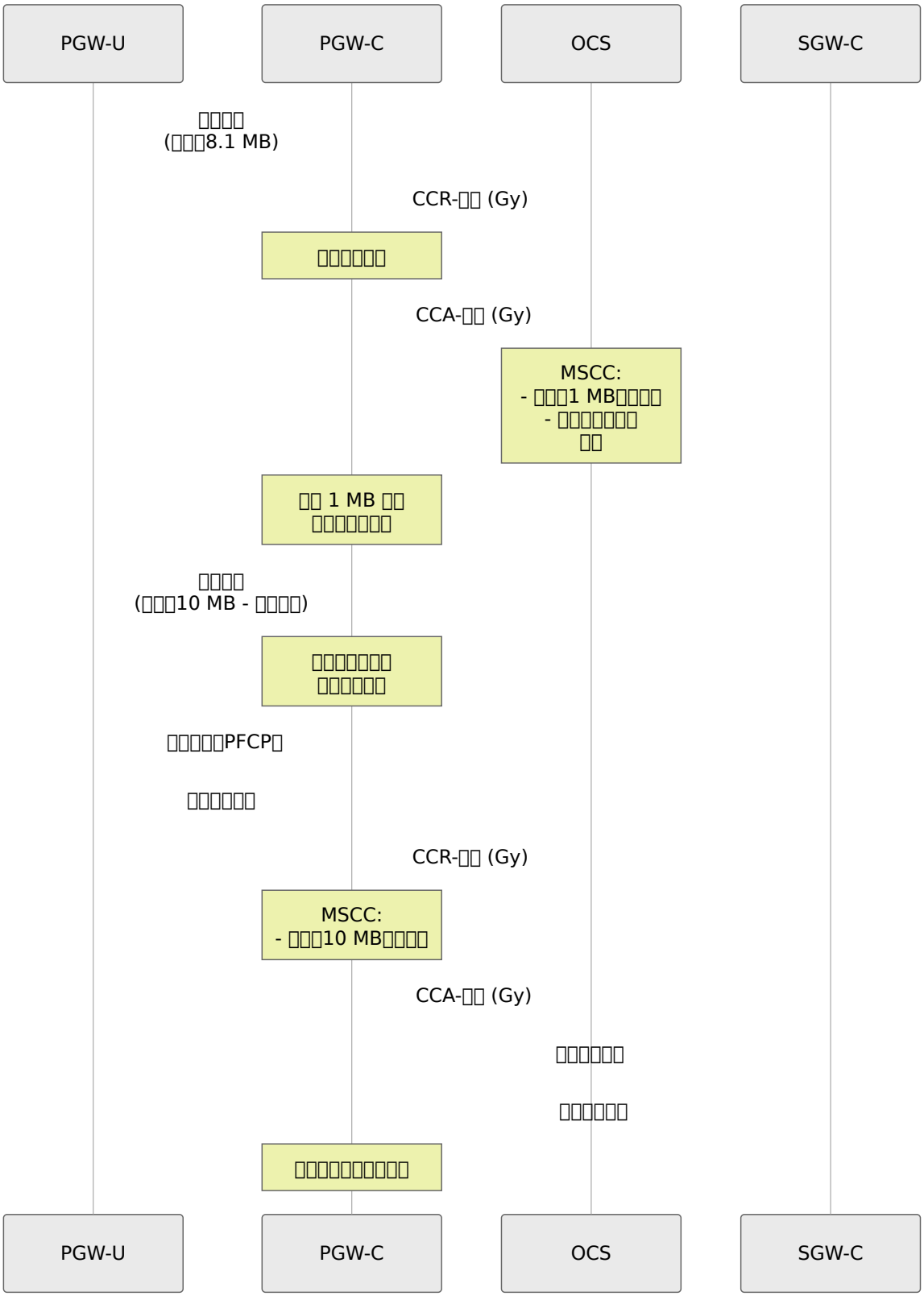
PGW-U
PGW-C
OCS
SGW-C
□□□□
(□□□8.1 MB)
CCR-□□ (Gy)
□□□□□□□
CCA-□□ (Gy)
MSCC:
- □□□1 MB□□□□
- □□□□□□□□
□□
□□ 1 MB □□
□□□□□□□□
□□□□
(□□□10 MB - □□□□)
□□□□□□□
□□□□□□□
□□□□□□PFCP□
□□□□□□□
CCR-□□ (Gy)
MSCC:
- □□□10 MB□□□□
CCA-□□ (Gy)
□□□□□□□
□□□□□□□
□□□□□□□□□□□□
PGW-U
PGW-C
OCS
SGW-C

OCS □□□□

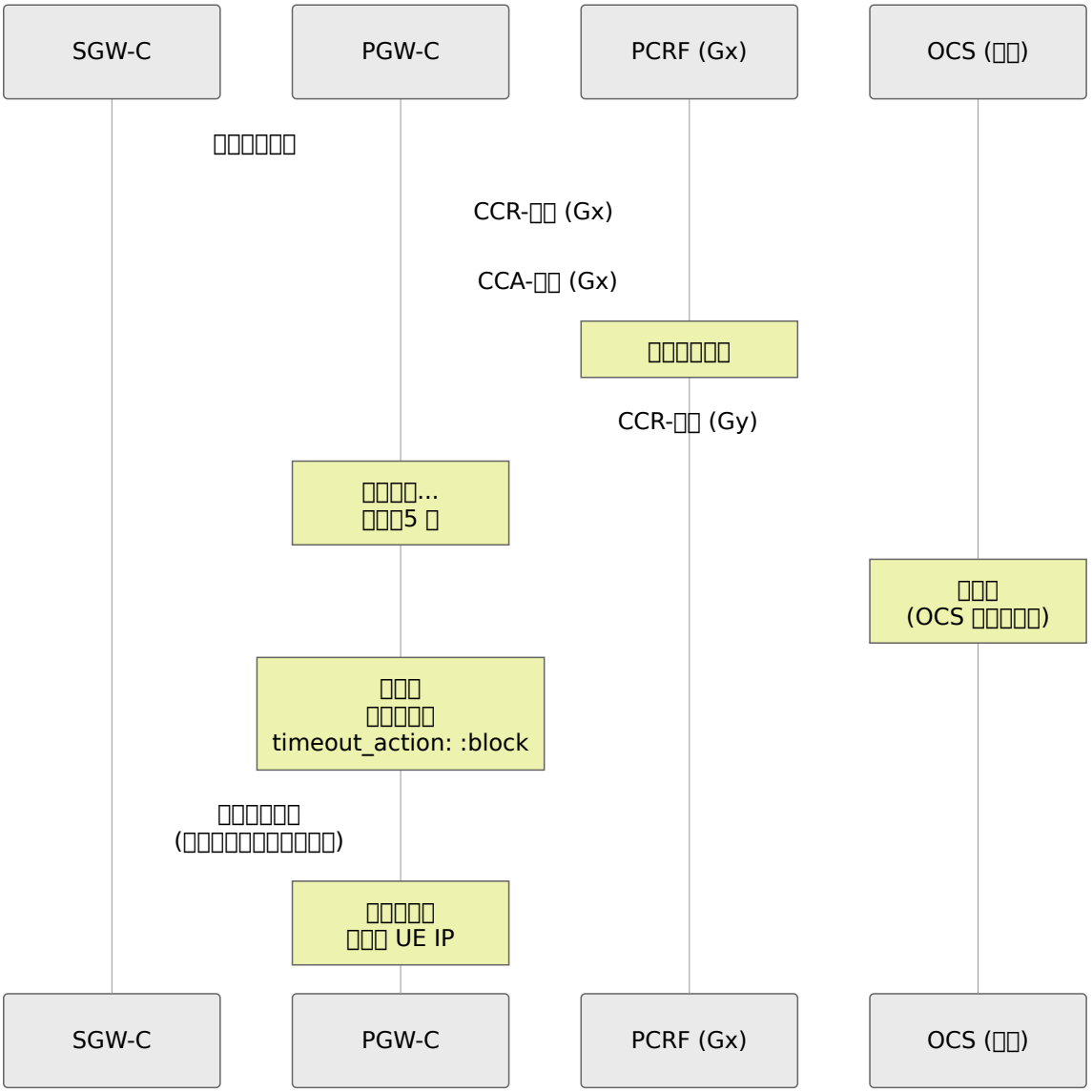
SGW-C
PGW-C
PCRF (Gx)
OCS (□□)
□□□□□□□
CCR-□□ (Gx)
CCA-□□ (Gx)
□□□□□□□
CCR-□□ (Gy)
□□□□...
□□□5 □
□□□
(OCS □□□□□)
□□□
□□□□□□
timeout_action: :block
□□□□□□□
(□□□□□□□□□□□□□□)
□□□□□□
□□□ UE IP
SGW-C
PGW-C
PCRF (Gx)
OCS (□□)

□□□□

□□□□

□□□□□□

□□	□□	□□
2001	DIAMETER_SUCCESS	□□□□□□□□□□

□□□□□4xxx□□

□□	□□	**PGW-C □□**
4010	DIAMETER_TOO_BUSY	□□□□□
4011	DIAMETER_UNABLE_TO_COMPLY	□□□□□□□□□□
4012	DIAMETER_CREDIT_LIMIT_REACHED	□□□□□□

□□□□□5xxx□□

□□	□□	**PGW-C □□**
5003	DIAMETER_AUTHORIZATION_REJECTED	□□□□
5031	DIAMETER_USER_UNKNOWN	□□□□□□□□□□□

□□□□□□□

□□□ □□□□□□□□□□ □□□□□□

1. □□□□ - □□□□
2. **MSCC** □□ - □□□□□

□□□

```
CCA-□□
├── □□□□□DIAMETER_SUCCESS (2001)  ← □□□□□OK
└── □□□□□□□□
    ├── [□□□□100]
    │   └── □□□□□DIAMETER_SUCCESS (2001)  ← RG 100□OK
    └── [□□□□200]
        └── □□□□□DIAMETER_CREDIT_LIMIT_REACHED (4012)  ← RG 200□□□
□
```

PGW-C □□□

- □□ RG 100 □□□
- □□ RG 200 □□□

□ Gx □□□

Gx □□□PCRF □□□□□□□□□□□□□□□□□□□□□□□□□□ Gy □□□□□□□□□□□□□□□□□□□□□□□□□□□□ Diameter Gx □□□

Gx □ Gy □□

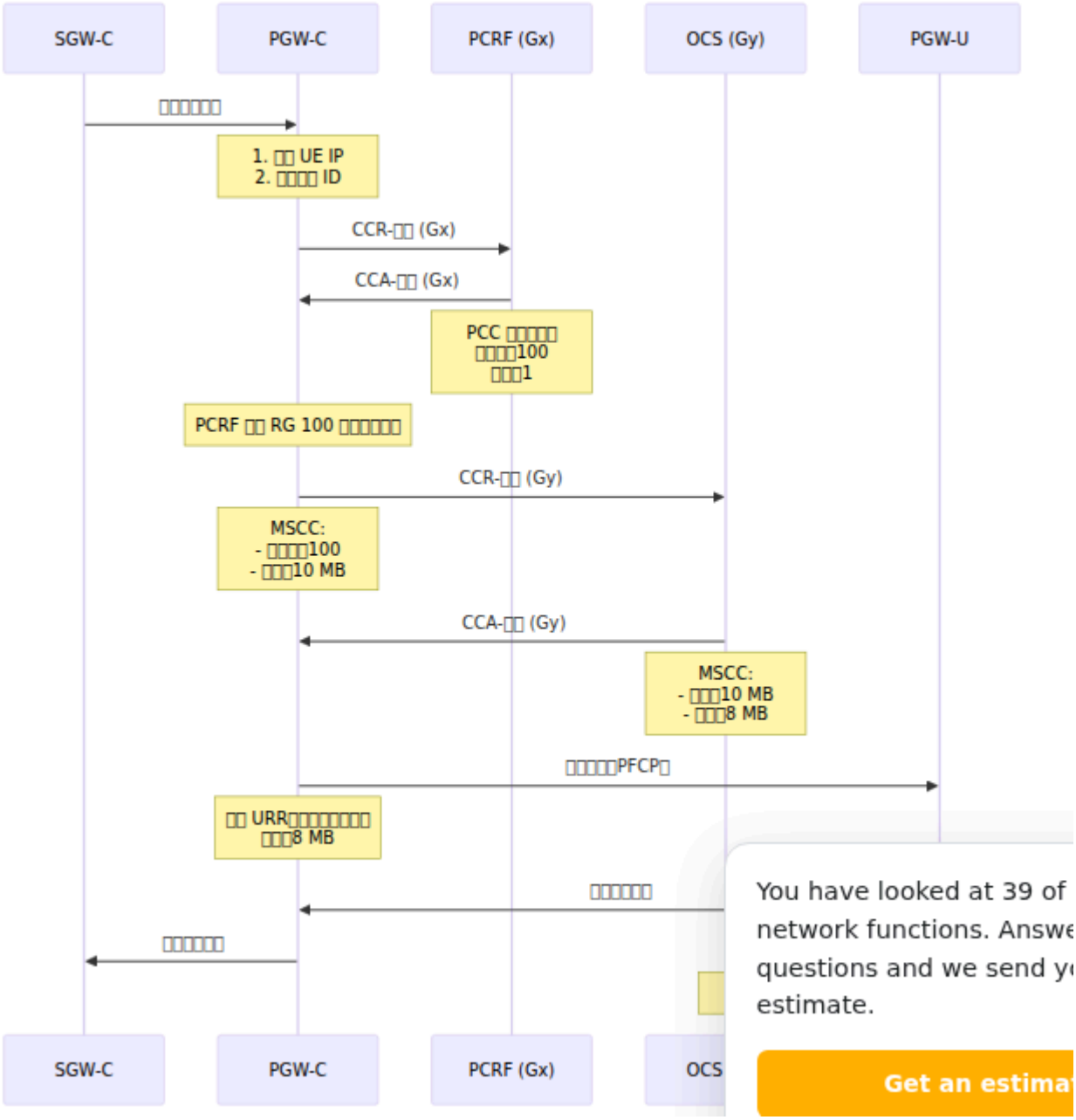
SGW-C
PGW-C
PCRF (Gx)
OCS (Gy)
PGW-U
□□□□□□□
1. □□ UE IP
2. □□□□□ ID
CCR-□□ (Gx)
CCA-□□ (Gx)
PCC □□□□□□
□□□□100
□□□1
PCRF □□ RG 100 □□□□□□□
CCR-□□ (Gy)
MSCC:
- □□□□100
- □□□10 MB
CCA-□□ (Gy)
MSCC:
- □□□10 MB
- □□□8 MB
□□□□□□PFCP□
□□ URR□□□□□□□□
□□□8 MB
□□□□□□□
□□□□□□□
SGW-C
PGW-C
PCRF (Gx)
OCS
You have looked at 39 of
network functions. Answe
questions and we send y
estimate.
Get an estima

□□□□

1. □□□□□

```
PGW-C □□□□□□□□□
    ↓
□□ CCR-I □ PCRF (Gx)
    ↓
□□□□ PCC □□□ CCA-I
    ↓
□□ PCC □□□
    - □□□□□□□□□□
    - □□ = 1□
    ↓
□□□□
    □□ CCR-I □ OCS (Gy) □□□□□□
    ↓
    □□□□□□□ CCA-I
    ↓
    □□□□□□□□□
    □□□□□□□□□□
□□□□
    □□□□□□□□
```

2. □□□□□□□□□ PCRF □ RAR□□

```
PCRF □□ RAR□□□□□□□□□ Gx
    ↓
□□□ PCC □□□□□=1□□□□=200
    ↓
PGW-C □□ CCR-U □ OCS (Gy)
    - □□□□ 200 □□ MSCC
    ↓
OCS □□□□□□□□
    ↓
□□□□□□□□□□□□□□
```

□□���□

□□□□

1. CCR-□□□ OCS □□

□□□

- □□□□□□□“OCS □□”
- □□□“CCR-□□ (Gy) □□”

□□□□□

- OCS □□□□
- □□□□ OCS IP □□□
- □□□□□ Diameter □□□3868□
- OCS □□

□□□□□

```
# □□□□□□□
ping <ocs_ip>

# □□ Diameter □□□TCP 3868□
telnet <ocs_ip> 3868

# □□□□
# □□□ peer_list □□□□ OCS □□□
```

2. □□□ OCS □□

□□□

- CCA-I □□□□□ != 2001
- □□□□□□□□□

□□□□□□□

□□□□	□□□□	□□□□
4012	□□□□□□□	□□□□□□□
5003	□□□□□□	□□□□□□□
5031	□□□□	□ OCS □□□□□

□□□□□

1. □□ OCS □□□□□□□□□□
2. □□ OCS □□□□□□□
3. □□ CCR-I □□ IMSI/MSISDN □□□□□□□□□□

3. □□□□□□□□□

□□□

- □□□□□□□□□□□□□□□□□□
- □□□ CCR-□□

□□□□□

- PGW-U □□□□ URR□□□□□□□□
- □□□□□□□□
- □□□ PFCP □□□□

□□□□□

1. □□ PFCP □□□□□□ URR□

```
□□ URR
├── URR-ID: 1
├── □□□□: VOLUME
├── □□□□: 8000000 (8 MB)
└── □□□□□: VOLUME_THRESHOLD
```

2. □□ PGW-U □□□□□□□□□

3. □□□□□□□ `quota_threshold_percentage`

4. □□□□□□□

□□□

- OCS □□□□□□“□□□□□□”
- □□□□□

□□□

- CCR-I □□□□□□□ OCS □□□□□□
- PCRF □□□□□□□□□□

□□□□□□

1. □□ PCRF □ PCC □□□□□□□
2. □□ OCS □□□□□□□□□□□□□
3. □□ PCC □□□ OCS □□□□□□□□

□□

□□□□

□□□□□□□□□□□ □□□□□

```
# Gy □□□□□message_type □ ro_CCR□ro_CCA□ro_RAR □ ro_RAA□
rate(gy_outbound_messages_total{message_type="ro_CCR"}[5m])
rate(gy_inbound_messages_total{message_type="ro_CCA"}[5m])

# □□□□□□□□□□□□□□□□□□□□□□□□□□□□□□□□ CCA □□
sum by (cc_request_type, result_code_class)
(rate(gy_inbound_responses_total[5m]))

# Gy □□□
rate(gy_inbound_errors_total[5m])

# □□ CCR □□□□□ CCA□OCS □□□□□□□□□
sum(rate(gy_outbound_messages_total{message_type="ro_CCR"}[5m]))
  - sum(rate(gy_inbound_responses_total[5m]))

# OCS □□□□□CCR □ CCA□
histogram_quantile(0.95, sum by (le)
(rate(gy_outbound_transaction_duration_bucket[5m])))

# □□□ Gy □□
gy_session_id_registry_count
```

□□

```
# □ Gy □□□□□□□□
- alert: GyErrorRateHigh
  expr: rate(gy_inbound_errors_total[5m]) > 0.1
  for: 5m
  annotations:
    summary: "□□□□□ Gy □□□□"

# □ OCS □□□ CCR □□□□□□□□□□□□□
- alert: OcsNotAnswering
  expr: |
    sum by (instance) (rate(gy_outbound_messages_total{message_type="
      - sum by (instance) (rate(gy_inbound_responses_total[5m])) > 0.
  for: 2m
  annotations:
    summary: "□ OCS □ CCR □□□□"

# □ OCS □□□□□□□□□
- alert: OcsRejectingCcrI
  expr:
sum(rate(gy_inbound_responses_total{cc_request_type="initial",result_
[5m])) > 0.1
  for: 5m
  annotations:
    summary: "OCS □□ CCR-I□□□ Gy □□□"
```

Gy □□□□□OAM API□

□□□□□□ **OAM REST API** □□□□□□□□□□□ HTTPS/TLS□□□□ `https://<host>:8443`□□ □□ API □□□Swagger UI□□□ `https://<host>:8443/api/docs` □□□

□□□□□□

```
GET /api/charging                 # □□□□□□□□□ + □□□□□□□
GET /api/charging?search=<imsi>   # □ IMSI □□□□
GET /api/charging/<imsi>          # □□□□□□□□□□□□□□ IMSI
```

□□□

```
curl -k https://localhost:8443/api/charging/310170123456789
```

`GET /api/charging` □□□□□□□□□□□□□□□□□□□□□□□□□□□□OCS □□□□□□□□□□□□□□□/□□□□□□□□□□□□□□□□□□□□□ `?search=<imsi>` □□□□□□□□□ IMSI □□□ `GET /api/charging/<imsi>` □□□□□□□□□□□□□□□□

Gy □□□□□□□□

```
POST /api/gy_simulator
```

□□□□□□□□□□□□□□□□□ OCS□□□□□□□□□□——□□□□□□□□□□□□□□□□□□□□□□□□□□□□□□□□□□□□——□□□□□□□□□□ □□□□□□□□□ □□□□□□□□□□ OAM API □□□□□□□□□□□□ Gy □□□□□□□□ Gy □□□□ □`gy.enabled: true`□□□□□□□ PGW-C □□□ Gy □□□□□□□□□□ OCS □□□□

□□□□`application/json`□□

□□	□□	□□
`imsi`	string	□□□ □□ IMSI□
`msisdn`	string	□□ MSISDN□E.164□□□□ `User-Name` □ `<msisdn>@<apn>`□
`apn`	string	□□ APN□
`requested_units`	integer	□□□□□□□□□□□□□□□□□□□□□□□□□□□□ → CC-□□□□□
`rating_group`	integer	□□□□□/□□□□□□□ `1`□□
`service_id`	integer	□□□□□□□□□
`cc_request_type`	string	`initial`□□□□□`update` □ `terminate`□□□□ `1`/`2`/`3`□□

□□ — □□□□□□ 1 MB □□□□□□□

```
curl -k -X POST https://localhost:8443/api/gy_simulator \
  -H 'content-type: application/json' \
  -d
'{"imsi":"310170123456789","msisdn":"14155551234","apn":"internet","r
```

□□□□□CCA-□□□□ 1 MB□□□□ 1 □□□□

```
{
  "session_id": "omni-pgw_c.epc...;734825199;app_gy_sim",
  "cc_request_type": 1,
  "cc_request_type_name": "initial",
  "result_code": "diameter_success",
  "accepted": true,
  "ocs_host": "ocs.epc.example.org",
  "ocs_realm": "epc.example.org",
  "granted": { "total_octets": 1000000, "input_octets": null,
"output_octets": null, "time": null },
  "validity_time": 3600,
  "final_unit_action": null,
  "final_unit_redirect": null,
  "mscc_result_code": "diameter_success"
}
```

□□□□□□□□□ `422`□`imsi` □□□□ `503`□Gy □□□□ OCS □□□——`reason` □□□□□□□□□□□ `:timeout`□□

□□□□

- □□□□□□□ — `GET /api/charging/<imsi>` □□□□□□□□□□□□□□□□□□
- □□□□□□□□□□□ **OCS** □□ — `POST /api/gy_simulator` □□ OCS □□□□□□□/□□□□□ □□□□□□□ IMSI□□□□□□□
- □□□□□□□ — □□ `GET /api/charging?search=<imsi>` □□□□□□□□□□□□□□□□□□□□ □□□

□□□□□□□□□□□□□□□□□□OCS □□□□□□□□□ Monitoring □□□□ Prometheus □□□

□□□□

□□□□□

- **Diameter Gx □□** - PCRF □□□□□□□□□□□□□ PCC □□
- **□□ CDR □□** - □□□□□□□□□□□□□□□□
- **□□□□** - □□□□□□□□□□□

□□□□

- **□□□□** - PDN □□□□□□□□□□□
- **PFCP □□** - □□ URRs □ PGW-U □□□□□□
- **S5/S8 □□** - GTP-C □□□□□□□□

□□

- **□□□□** - Gy □□□□□□□□OCS □□□□
- **UE IP □□** - □□□□□ IP □□□

□□□□□□

Gn/Gp □□□□

□ SGSN □ GTP-C □□□2G/3G □□□

OmniPGW □ Omnitouch □□□□□□

□□

Gn/Gp □□□ OmniPGW □□□□ 2G/3G □□□ **GGSN**□□□ GPRS □□□□□□□ **GTP-C v1** □□□ □□□□□ GGSN □ SGSN □□□ PDP□□□□□□□□□□□□□□□

- **Gn** □□□□□□□ PLMN□□□□□□□□ SGSN
- **Gp** □□□□□□□ PLMN□□□□□□□□ SGSN

□□□□□□□□□□□□ - □□□□□□□□□□

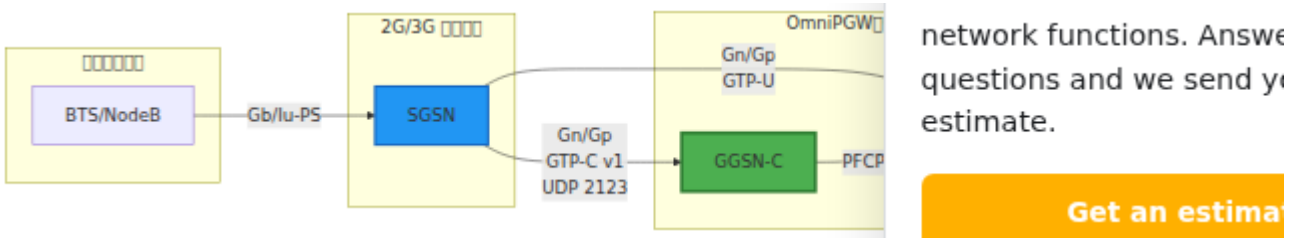

□ PGW (S5/S8) □□□□□

□□	**GGSN (Gn/Gp)**	**PGW (S5/S8)**
□□□□	GTP-C v1	GTP-C v2
3GPP □□	TS 29.060	TS 29.274
□□□□	PDP □□□	PDN □□ + □□
□□□□□	NSAPI (0-15)	EBI (5-15)
□□□□	□□□□□□□	Gx (PCRF)
QoS □□	R99 QoS □□□□	EPS □□ QoS (QCI)
□□	2123□□□□	2123

□□□□

GTP-C □□ 1

- □□□GTP-C v1 (3GPP TS 29.060)
- □□□UDP
- □□□2123□□ S5/S8 GTP-C v2 □□□
- □□□□□□□□□□

TEID□□□□□□□□□□

□□ PDP □□□□□□□□ TEID □□□□□□□□□□□□□

- **GGSN** □□ **TEID**□□ OmniPGW □□□□□□□□□
- **GGSN** □□ **TEID**□□ UPF □□□□□□□□□

- **SGSN** □□ **TEID**□□ SGSN □□□□□□□□□□□□
- **SGSN** □□ **TEID**□□ SGSN □□□□□□□□□□□□

```
□□□□
  SGSN → GGSN: □□ TEID = GGSN □□□ TEID
  GGSN → SGSN: □□ TEID = SGSN □□□ TEID
```

CUPS □□□□□□□□□□□□

□□

□□□□

```
# config/runtime.exs
config :pgw_c,
  # □□□ gn □□□□Gn/Gp □□□□□□
  gn: %{
    # Gn □□□□□ IPv4 □□
    local_ipv4_address: "10.0.0.20",

    # □□□□□ IPv6 □□
    local_ipv6_address: nil,

    # GTP-C v1 □□□□□ S5/S8 □□□
    local_port: 2123
  },

  # □ PCO □□□□ DNS □□□□□ PGW □□□
  dns: %{
    primary_ipv4: {8, 8, 8, 8},
    secondary_ipv4: {8, 8, 4, 4}
  }
```

Gn □□□□

□□	□□	□□	□□	□□
`local_ipv4_address`	□□□	□	-	□□ Gn □□□□□ IPv4 □□□□□□ SGSN □□ GGSN □□□
`local_ipv6_address`	□□□	□	`nil`	□□□ IPv6 □□□□□□ 2G/3G □□□□□ IPv4□
`local_port`	□□	□	2123	GTP-C □ UDP □□□□□ 3GPP TS 29.060 □□□□□□□ S5/S8 □□□

DNS □□

□□	□□	□□	□□	□□
`primary_ipv4`	□□	□	`{8, 8, 8, 8}`	□ PCO □□□□□ DNS □□□ IPv4 □□
`secondary_ipv4`	□□	□	`{8, 8, 4, 4}`	□ PCO □□□□□ DNS □□□ IPv4 □□
`primary_ipv6`	□□	□	`nil`	□ DNS □□□ IPv6 □□□
`secondary_ipv6`	□□	□	`nil`	□ DNS □□□ IPv6 □□□

□□□□

□□□□□□□

```
# □□□□□ SGSN □□□ GTP-C
iptables -A INPUT -p udp --dport 2123 -s <sgsn_network>/24 -j
ACCEPT

# □□□ SGSN □□□ GTP-C
iptables -A OUTPUT -p udp --dport 2123 -d <sgsn_network>/24 -j
ACCEPT
```

□□□□

PDP □□□□□

□□ **PDP** □□□□□

□□□SGSN → GGSN

□□□□□□□□ PDP □□□□□□□□□□□□

□□□□□□□□**IEs**□□

IE □□	□□	□□
IMSI	□□	□□□□□□□□□
NSAPI	□□	□□□□□□□□□□□ (5-15)
TEID □□ I	□□	SGSN □□□□□□□□□
TEID □□	□□	SGSN □□□□□□□□□
□□□□□□	□□	□□□ PDN □□□□□ IP
□□□□□	□□□	□□□ APN
GSN □□□□□□	IP	SGSN □□□□□□
GSN □□□□□□	IP	SGSN □□□□□□
QoS □□□	□□□	□□□ QoS □□
MSISDN	□□	□□□□□□□□
□□□□	□□	APN □□□□
□□□□□□	□□	□□□□□□

□□□

```
□□ PDP □□□□□
├── IMSI: 310260123456789
├── NSAPI: 5
├── TEID □□ I: 0x12345678
├── TEID □□: 0x87654321
├── □□□□□□: IPv4□□□
├── APN: internet
├── GSN □□□□□: 10.1.1.100
├── GSN □□□□□: 10.1.1.100
├── QoS □□□: [R99 QoS □□]
└── PCO: [DNS □□□]
```

□□ **PDP** □□□□□

□□□GGSN → SGSN

□□□□□ PDP □□□□□□□□□□

□□□□□□□

IE □□	□□	□□
□□	□□	□□□□□□□□
□□□□□□□	◆◆◆□	□□□□□□□□□
□□	□□□	GGSN □□□□□
TEID □□ I	□□	GGSN □□□□□□□□□
TEID □□	□□	GGSN □□□□□□□□□
NSAPI	□□	□□□ NSAPI
□□ ID	□□□	□□□□ ID
□□□□□□□	□□	□□□ UE IP □□
GSN □□□□□□	IP	GGSN □□□□□□
GSN □□□□□□	IP	GGSN □□□□□□
QoS □□□□	□□□	□□□ QoS □□
□□□□□□	□□	DNS □□□□□

□□□□□

```
□□ PDP □□□□□□
├── □□: □□□□□□ (128)
├── TEID □□ I: 0xAABBCCDD
├── TEID □□: 0xDDCCBBAA
├── NSAPI: 5
├── □□ ID: 0x11223344
├── □□□□□□□
│   └── IPv4: 100.64.1.42
├── GSN □□□□□□□: 10.0.0.20
├── GSN □□□□□□□: 10.0.0.20
├── QoS □□□□□: [□□□ QoS]
└── PCO
    ├── □ DNS: 8.8.8.8
    └── □ DNS: 8.8.4.4
```

□□ **PDP** □□□□□□

□□□SGSN → GGSN

□□□□□□□□□ PDP □□□□□□□□□SGSN □□□QoS □□□

□□□□□□

- □ SGSN □□□□□□□□□□□□
- QoS □□□□
- SGSN □□□□

□□□□□□□□

IE □□	□□
NSAPI	PDP □□□□□□
TEID □□ I	□□ SGSN □□□□ TEID
GSN □□	□□ SGSN □□
QoS □□□□	□□□ QoS□□□□

□□ **PDP** □□□□□

□□□GGSN → SGSN

□□□□□ PDP □□□□□

□□□□□□□

IE □□	□□
□□	□□□□□□□
TEID □□ I	GGSN □□□□ TEID
GSN □□	GGSN □□
QoS □□□□	□□□ QoS

□□ **PDP** □□□□□

□□□SGSN → GGSN

□□□□□ PDP □□□

□□□□□□□

IE □□	□□
NSAPI	□□□□ PDP □□□
□□□□	□□□□□□□□□□□□□

□□ **PDP** □□□□□

□□□GGSN → SGSN

□□□□□ PDP □□□□□

□□□□□□□

IE □□	□□
□□	□□□□□□□□

□□□□

□□□□ / □□

□□□□□

□□□□□□□□□□□□□□□□

□□□□□□□□

IE □□	□□
□□	□□□□□□□□□□□□□□

□□���

PDP □□□□□

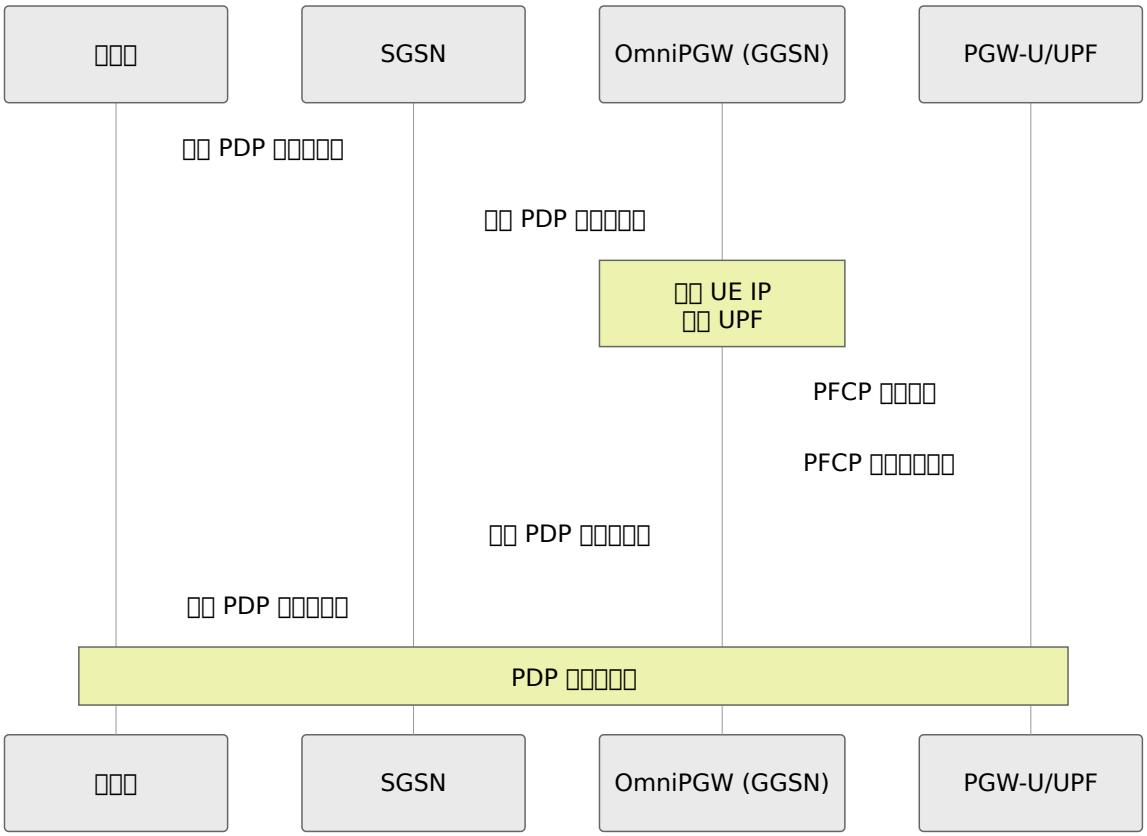
□□□
SGSN
OmniPGW (GGSN)
PGW-U/UPF
□□ PDP □□□□□
□□ PDP □□□□□
□□ UE IP
□□ UPF
PFCP □□□□
PFCP □□□□□□
□□ PDP □□□□□
□□ PDP □□□□□
PDP □□□□□
□□□
SGSN
OmniPGW (GGSN)
PGW-U/UPF

PDP □□□□□

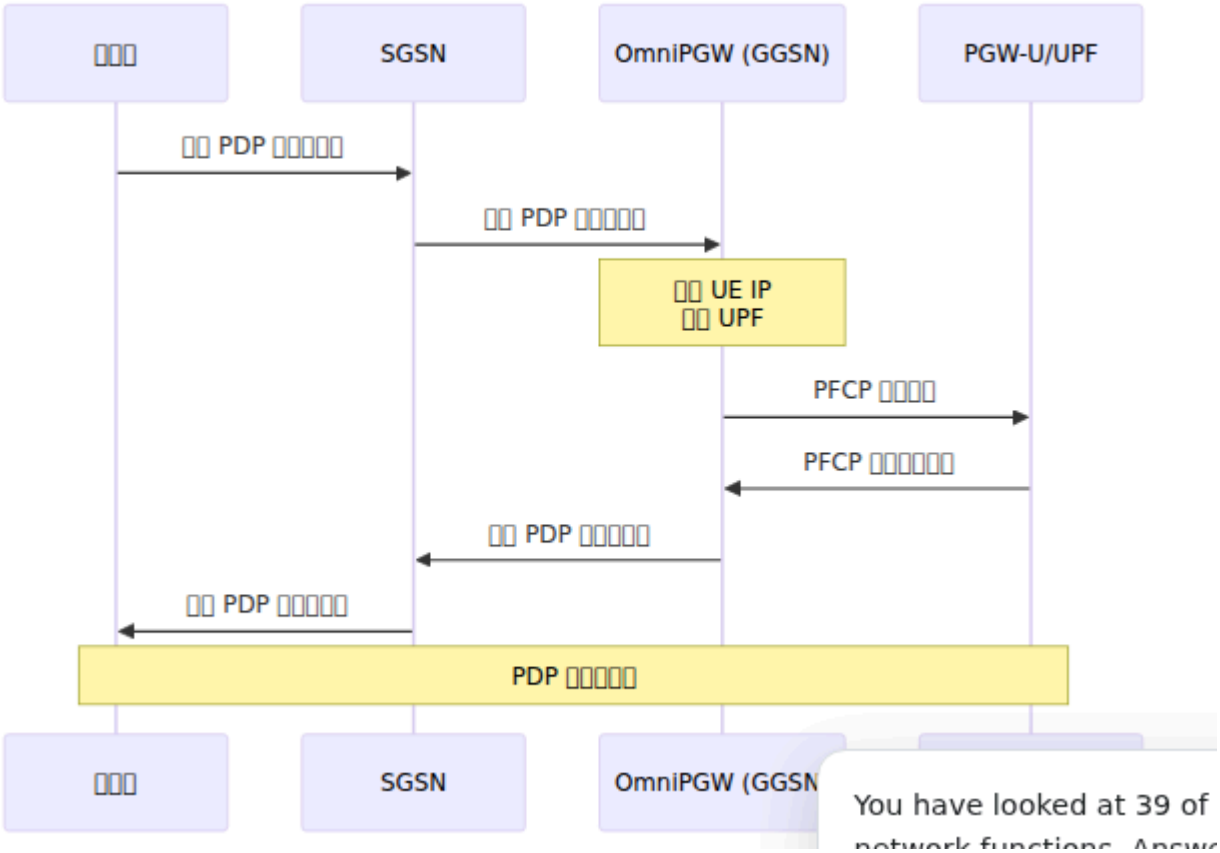
□□□
SGSN
OmniPGW (GGSN)
PGW-U/UPF
□□ PDP □□□□□
□□ PDP □□□□□
□□ UE IP
□□ UPF
PFCP □□□□
PFCP □□□□□□
□□ PDP □□□□□
□□ PDP □□□□□
PDP □□□□□
□□□
SGSN
OmniPGW (GGSN
You have looked at 39 of

□ SGSN □□

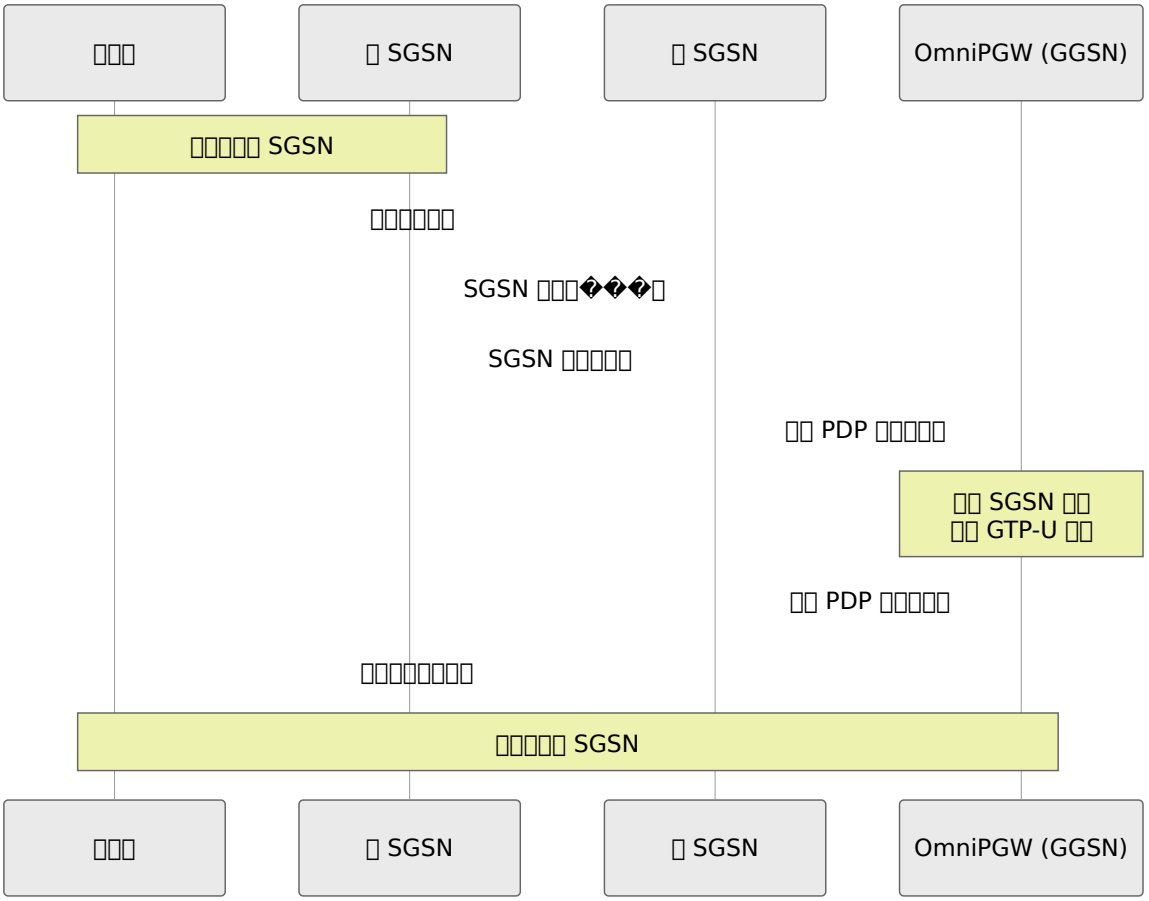

□□□□□□

OmniPGW □ GGSN □□□ PGW □□□□□□□□□□

UE IP □□□□

□□□ PGW □□□ AddressRegistry □□□□□□□□□□□□□□□□□□□□□□□□ UE IP □□□

UPF/PFCP □□□□

□□□ PGW □□□ PFCP □□□□□□

- □□ PDP □□□□□□ PDR/FAR/QER □□
- □□□□□□ upf_selection □□□□ UPF

- □□□□□□□□□□□ PFCP □□□

□□□□□Gy□

□□□ Diameter Gy □□□□□

- □□□□□□□□□□□
- □ PGW □□□□□ Gy □□
- □□□□□□□□ Diameter Gy □□□

CDR □□

□□□ PGW □□□ CDR □□□□□□□□□□□□□□ □□ CDR □□□

□□□□

□□

□□	□□	□□
128	□□□□□	□□□□

□□□□

□□	□□	□□□□
192	□□□	□□□ PDP □□□
193	□□□□□□□	□□□□□ GTP □□
194	IMSI □□	□□□□□□
195	MS □ GPRS □□	MS □□□
196	MS □ GPRS □□	MS □□□□
197	MS □□	MS □□□□
198	□□□□□	GTP □□□□□
199	□□□□□	□□□□
200	□□□□□	□□□□□□
201	□□ IE □□□	IE □□□□
202	□□ IE □□	□□□□□ IE
203	□□ IE □□□	□□ IE □□
204	□□□□	□□□□
205	□□□□	□□□□□
206	P-TMSI □□□□□	□□□□
207	GPRS □□□□	□□□□□
208	□□□□□□	□□□□□□

□□	□□	□□□□
209	□□□□□□□□	□□□□□□□□

□□

Gn □□□□

```
# □□□□□
gn_inbound_messages_total{message_type="create_pdp_context_request"}
gn_inbound_messages_total{message_type="update_pdp_context_request"}
gn_inbound_messages_total{message_type="delete_pdp_context_request"}

gn_outbound_messages_total{message_type="create_pdp_context_response"
gn_outbound_messages_total{message_type="update_pdp_context_response"
gn_outbound_messages_total{message_type="delete_pdp_context_response"

# □□□□
gn_outbound_transaction_duration_bucket
```

□□□□□

PDP □□□□□□□

```
rate(gn_inbound_messages_total{message_type="create_pdp_context_reque
[5m])
```

□□□□

```
sum(rate(gn_outbound_messages_total{message_type="create_pdp_context_
[5m]))
  /
sum(rate(gn_inbound_messages_total{message_type="create_pdp_context_r
[5m]))
```

□□ **PDP** □□□□

```
gn_inbound_messages_total{message_type="create_pdp_context_request"}
  -
gn_inbound_messages_total{message_type="delete_pdp_context_request"}
```

□□□□

□□□□□□ **PDP** □□□□□□□□

□□□

- SGSN □□□□ PDP □□□□□
- □□□□□□□
- SGSN □□

□□□□□

1. □□□□□□□
2. OmniPGW □□□□□ IP □□□
3. □□□□□ UDP 2123
4. UPF/PFCP □□□□

□□□

```
# □□ OmniPGW □□□□□
netstat -ulnp | grep 2123

# □□□□□□□□
tcpdump -i any -n port 2123

# □□□□
grep "local_ipv4_address" config/runtime.exs

# □□ PFCP □□
curl http://pgw:9090/metrics | grep pfcp
```

□□□PDP □□□□□□□□

□□□

- □□ PDP □□□□□□□□□□□□
- PDP □□□□□□

□□□□□

```
□□ 199□□□□□□□□
  → IP □□□
  → □□□curl http://pgw:9090/metrics | grep address_registry_count
  → □□ ue.subnet_map □□ IP □

□□ 202□□□ IE □□□□
  → SGSN □□□□□□ IEs
  → □□ SGSN □□
  → □□ tcpdump □□□□

□□ 204□□□□□□□
  → UPF/PFCP □□
  → □□ PFCP □□□□
  → □□ OmniPGW □□
```

□□□□□ PDP □□□□□

□□□

- □□ PDP □□□□□□□□□□□□
- □□□□

□□□□□

- □□□ PDP □□□□TEID □□□
- NSAPI □□□
- □□□□□

□□□

```
# □□□□□□□
curl http://pgw:9090/metrics | grep session_count

# □□□□□□□□□□□□□
journalctl -u omnipgw | grep "PDP Context"
```

□□□□

□□□□

1. □ **S5/S8** □□□□
    - Gn □ S5/S8 □□ UDP □□ 2123
    - OmniPGW □□□□ GTP □□
    - □□ IP □□□□□□□ 2G/3G □ 4G
2. **SGSN** □□□
    - □□□□ SGSN □□□□ GGSN IP
    - □□□ Gn □□□□□□ VLAN
    - □□□□□□□□□□Gp□
3. **IP** □□□□
    - □□□ IP □□□□□□ PGW □ GGSN □□

- □□□ 2G/3G □□□□ APN □□□□

□□

1. □□□□

   - □□ `session_count` □□
   - □□□□□ 2G/3G □□□□□
   - □□□ 2G/3G □□□□□□□□□□□□

2. **UDP** □□□□□

   - □ S5/S8 □□□□□
   - □□□□□□□□ 4-8 MB

□□□□

□□□ GGSN □□□ OmniPGW □□

1. **APN** □□

   - □□ APN □□□ GGSN □□□□
   - □□ PCO □□ DNS □□□□□

2. **IP** □□□

   - □□□□ IP □□□
   - □□□ APN □□□□□

3. **QoS** □□

   - R99 QoS □□□□□□□□□
   - 2G/3G □□□ QCI □□

□□□□

□□□□

- □□□□ - □□□□□□□□
- □□□□ - □□□□□□□□□□□
- **UE IP □□** - IP □□□□
- **PCO □□** - □□□□□□□

□□□□

- **S5/S8 □□** - 4G/LTE □□□□
- **PFCP □□** - □□□□□□□
- **Diameter Gy □□** - □□□□

□□

- □□□□ - □□□□□
- □□□□ - □□□□
- **□□ CDR □□** - CDR □□

□□□□

- 3GPP TS 29.060 - GPRS □□□□□GTP□□□ Gn □ Gp □□
- 3GPP TS 23.060 - □□□□□□□□□□GPRS□□□□□□□
- 3GPP TS 24.008 - □□□□□□□□ 3 □□□□QoS □□□□□

□□□□□□□

OmniPGW Gn/Gp □□ - *□ Omnitouch □□□□□□*

IPv6 / □□ (IPv4v6) PDN □□

□ OmniPGW□□□□□□□ OmniUPF□□□□□□□□□□□ IPv6 □ PDN □□□□□□□□□□□□□□□ PDN □ □□□□□□□□□□□□□□□

□□ / □□	**IPv6 □□**
OmniPGW — S5/S8	□□ PDN □□□□□ UE □□□□□ PDN □□□□ (PAA)
OmniPGW — Gx	□ UE □□□□□ PCRF□`Framed-IP-Address`□IPv4□□□ IPv4/IPv4v6 PDN□`Framed-IPv6-Prefix` □□□ IPv6 PDN
OmniPGW — Sxb	□□ PFCP □ UE IPv6 □□□ PDN □□□□□□□ UPF
OmniUPF — □□ □□	□□ IPv6 □□□□□□□/□□ IPv6 □□□□
OmniUPF — FRR	□□ OSPFv3 □□□ UE IPv6 `/128` □□□□□□□□□□□□□

□□□□□3GPP TS 29.274 (GTPv2-C)□3GPP TS 29.212 (Gx)□3GPP TS 29.244 (PFCP)□

PDN □□

□	**PDN □□**	**UE □□**	**PAA □□ (TS 29.274 §8.14)**
1	IPv4	IPv4 □□	4 □□ IPv4 □□
2	IPv6	IPv6 □□ (/64)	□□□□□□ + 16 □□□□
3	IPv4v6	IPv4 □□ + IPv6 □□	□□□□□□ + 16 □□ IPv6 + 4 □□ IPv4

PGW-C □ **PDN □□ IE** □□□□□ PDN □□□□□ PDN □□ IE □□□□□□□ **PAA IE** □□□□□□□□□□□□ □□□□□ SGW □ PAA□□□□ UPF □ PFCP PDN □□ IE□□□□□□□□□□

> □□ **IPv6** □□ **IPv4v6**□ □□□□ IPv4v6 PDN□□□□□ APN □□□□ IPv6 □□□PGW-C □□□ □□□□□ PDN □□□□ IPv4 □□□□□□□□□ APN □□□□□ (SOS) APN□□□□ APN □□ IPv6 □□ □ IPv4v6 □□□

□□□□□

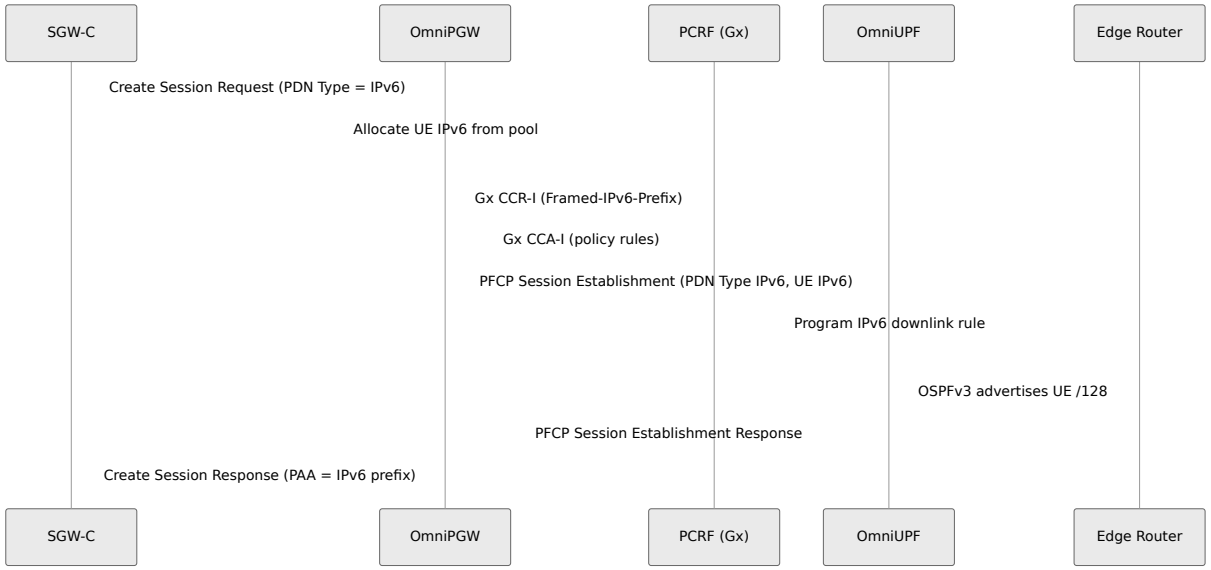
SGW-C
OmniPGW
PCRF (Gx)
OmniUPF
Edge Router
Create Session Request (PDN Type = IPv6)
Allocate UE IPv6 from pool
Gx CCR-I (Framed-IPv6-Prefix)
Gx CCA-I (policy rules)
PFCP Session Establishment (PDN Type IPv6, UE IPv6)
Program IPv6 downlink rule
OSPFv3 advertises UE /128
PFCP Session Establishment Response
Create Session Response (PAA = IPv6 prefix)
SGW-C
OmniPGW
PCRF (Gx)
OmniUPF
Edge Router

□□□□

□□	□□	□□	□□	□□
`ue.subnet_map`	Map	□	-	□ APN □□□□ `:default`□□□□ CIDR □□□□□□ `default` □□□□ APN □□□□□□□□□□□□
□□□□□□□	□□□□CIDR□	□	-	IPv4□□□ `100.64.16.0/24`□□ IPv6□□□ `2001:db8:6f85:70::/64`□□□□□□□□□□□□□□IPv6 UE □□□□□□□□□□□□□□□□ UE □□□□ `/64`□

> □□ APN □□□□□□□□□□ APN □□□□□□□□□□□□□□□□□□□□ UE IP Pool Allocation□

□□□□ IPv4 □ IPv6 CIDR □ APN □□ IPv4□IPv6 □ IPv4v6 PDN□PGW-C □□□□ PDN ���□□□□□□□□□□□□□□□□ IPv4v6□□□□□□□□□□□□□□□□

Gx (Framed-IPv6-Prefix)

Gx □□□□□□□□□PGW-C □□□□□□□ UE □□□□□ Gx □□□□ AVP□

- □ **IPv6 PDN** — □□ `Framed-IPv6-Prefix` AVP □□ UE IPv6 □□ □RFC 3162 §2.3□□□□□□ `Framed-IP-Address`□□□□□ IPv4□□
- **IPv4** □ **IPv4v6 PDN** — UE IPv4 □□□□ `Framed-IP-Address` □□□□□□□ IPv4v6□ IPv6 □□ □ □ Gx □□□□□CCR □□□□□ AVP □ IPv4 □□□□□□□IPv6 □□□□□□ PFCP □□□□□□ UPF□□□□ PAA □□□□□ UE□

□□□□ IPv6 □□□□□PCRF □□□□□□□□□□□□ `Framed-IPv6-Prefix`□□□□□□□□□□□□□□□□□□□□□□ — □ □□ □□□□□□

□□□□ (OmniUPF)

□□□□ IPv6 PDN □□□□□□OmniUPF □□□□□ IPv6□□ PGW-C □□□□ PFCP □□□□□□ IPv6 □□□□□□□□ □ OSPFv3 □□□□ UE IPv6 `/128` □□□□□□□□□□□□□□□□□□□□□□□□□□□□□□ UPF□

□□□□□□□ OmniUPF □□□□□□□□□□□□□□ PGW-C□□□□□□□□□UPF UE □□ OSPFv3 □□□□□□□□□□□□ □ **OmniUPF IPv6 /** □□□□□□□□□□ PGW-C □□□□□□□□□□□□□□□□□□ UPF □□ IPv6 — PGW-C □□ PFCP □□□□□ UE IPv6 □□□□ PDN □□□□□□□ PFCP/Sxb□□

□□□

PDN □□□□ (PAA) — TS 29.274 §8.14

PDN □□	□□□□□□□
IPv4	4 □□□IPv4 □□
IPv6	1 □□□□□□□ + 16 □□ IPv6 □□/□□
IPv4v6	1 □□□□□□□ + 16 □□ IPv6 + 4 □□ IPv4

Gx □□□ AVP

AVP	□□	□□	□□	□□
`Framed-IP-Address`	8	IPv4	4 □□□□	RFC 4005
`Framed-IPv6-Prefix`	97	IPv6	□□□□ + □□□□ + □□	RFC 3162 §2.3

PFCP PDN □□ IE — TS 29.244

□	□□
1	IPv4
2	IPv6
3	IPv4v6

□□□□

Gx CCR □□□□ IPv6 □□

□□□□□□□□ IPv4 □□□□□□□ IPv6/IPv4v6 □□□□□□□ `remote_peer_not_responding`□Gx □□□□□□□□□

□□□□□□

- PCRF □□□□ `Framed-IPv6-Prefix` AVP□□□□□□□□□□
- □□□ PCRF/HSS □□□□ IPv6□

□□□□□□

1. □□□□□ PCRF/HSS □□□□□□□□□
2. □□ PCRF □□ Gx CCR-I □ `Framed-IPv6-Prefix`□
3. □□□□□□□ IPv4 □□□□□□□□□□□ IPv6 □□□□□□

IPv6 □□□□□□□□□□□□□□ UE

□□□□□□□□□□□□ IPv6 PAA□□□□□□□□□□□□□□□□ UE □□□□□□□□

□□□□□□□□OmniUPF□□□□□ — PGW-C □□□□□□□□□□□ PFCP □□□□□□□□□□□ UE `/128` □□□□□□□ □□□□□□□□UPF □□□□□ OSPFv3/□□□□□□□□□□□□□□□□

2. □□□□□□□□□□□

APN □□ IPv6 □□□ IPv4v6 □□

□□□UE □□□ `ue.subnet_map` □□□□□ IPv4 CIDR□□□ IPv6 □□□□ APN □□ **IPv4v6** PDN□□ APN □□□□□□□□□ □ **IPv4** □□□□□□□□□ □□□□

□□□□□□□ APN □ IPv6 □□□□□□IPv6 □□□□□□□ IPv6 □□□□□□□□□□□

OmniPGW □□□□□□□

Prometheus □□□□□□□

□ Omnitouch □□□□□□

□□

1. □□
2. □□□□
3. □□□□
4. Prometheus □□
5. Grafana □□□
6. □□
7. □□□□
8. □□□□□□

□□

OmniPGW □□□□□□□□□□□□□

1. □□ OAM REST API□□□□□□□□□□□□□□□□□□□□□□□□

- □□□□□□□ (`GET /api/sessions`)
- PFCP □□□□ (`GET /api/upf`)
- Diameter □□□□□ (`GET /api/diameter`)
- □□□□□□ (`GET /api/sessions/<imsi>`)

2. Prometheus □□□□□□□□□□□□

- □□□□□□□
- □□□□□

- □□□□
- □□□□

□□□□□□□□ **Prometheus** □□□□□□ OAM REST API□□□ HTTPS □□□ `8443` □□□□□□ `/api` □ □□□□□□□□□□

- □□□□ - □□ API
- PFCP □□ - □□ API
- Diameter Gx - □□□□ API

Prometheus □□□□

OmniPGW □□ □ **Prometheus** □□□□□□□□□□

```
config :pgw_c,
  metrics: %{
    enabled: true,
    ip_address: "127.0.0.42",       # □□□□□□□□□□ "0.0.0.0" □□□□□□□□
□□
    port: 9090,                      # □□ HTTP □□
    registry_poll_period_ms: 10_000  # □□□□□□□□ 10s□
  }
```

> □□□ □□□□□□□□□□ `127.0.0.42:9090`□□□□□ Prometheus □□□□□□ `ip_address` □□ □□□□□□□□□□□ `"0.0.0.0"`□□

□□□□

HTTP □□□

```
http://<omnipgw_ip>:<port>/metrics
```

□□□

```
curl http://10.0.0.20:9090/metrics
```

□□□□

□□□ **Prometheus** □□□□ □□□

```
# HELP teid_registry_count □□□□□□□ TEID □□
# TYPE teid_registry_count gauge
teid_registry_count 150

# HELP address_registry_count □□□□□□□□□□□□
# TYPE address_registry_count gauge
address_registry_count 150

# HELP s5s8_inbound_messages_total □ S5/S8 □□□□□□□□□□□□□
# TYPE s5s8_inbound_messages_total counter
s5s8_inbound_messages_total{message_type="create_session_request"}
1523
s5s8_inbound_messages_total{message_type="delete_session_request"}
1487
```

□□□□

OmniPGW □□□□□□□□□□

□□□□

□□□□□□□□

□□□□	□□	□□
`teid_registry_count`	Gauge	□□ S5/S8 □□□TEID □□□
`seid_registry_count`	Gauge	□□ PFCP □□□SEID □□□
`gx_session_id_registry_count`	Gauge	□□ Gx □□□Diameter □□ ID □□□
`gy_session_id_registry_count`	Gauge	□□ Gy □□□Diameter □□ ID □□□
`session_registry_count`	Gauge	□□□□□IMSI, EBI □□
`address_registry_count`	Gauge	□□□ UE IP □□
`charging_id_registry_count`	Gauge	□□□□ ID□□□ CDR □□□□□ □□□ □□ CDR □□□
`sxb_sequence_number_registry_count`	Gauge	□□□□ PFCP □□□□□□□□
`s5s8_sequence_number_registry_count`	Gauge	□□□□ S5/S8 □□□□□□□□
`sxb_peer_registry_count`	Gauge	□□□ PFCP □□□□□□

□□□

```
# □□□□□□□
teid_registry_count

# □□□□□□□□□□□
rate(teid_registry_count[5m])

# □□□□□□□□□□□
max_over_time(teid_registry_count[1h])
```

□□□□□□□□□□

□□□□ PDN □□□□□□□□□□□□□□□□□□

□□□□	□□	□□	□□
`pgw_session_create_total`	Counter	`result`, `cause`, `pdn_type`, `rat_type`	PDN □□□□□□□□□□/□□□□GTP □□□PDN □□□ RAT □□
`pgw_session_delete_total`	Counter	`pdn_type`	PDN □□□□□□ PDN □□
`pgw_session_modify_total`	Counter	-	□□□□□□□□□□□□
`pgw_bearer_create_total`	Counter	`type`, `qci`	□□□□□□□□□□□□□□□/□□□□ QCI
`pgw_bearer_delete_total`	Counter	`type`	□□□□□□□□□□□□□□□/□□□

□□□

```
# □□□□□□□□□□□ 5 □□□
sum(rate(pgw_session_create_total{result="success"}[5m])) /
sum(rate(pgw_session_create_total[5m]))

# □□□□□□□□□□□□□
sum(rate(pgw_session_create_total{result="failure"}[5m])) by
(cause)
```

UE IP □□□

□□□□□□□□□□□□□□□□□□□□□□□□□□□□ □□□ UE IP □□□

□□□□	□□	□□	□□
`ue_pool_addresses_allocated`	Gauge	`pool`, `ip_version`	□□□□□□□□□ UE IP □□
`ue_pool_addresses_total`	Gauge	`pool`, `ip_version`	□□□□□□□ UE IP □□
`ue_pool_addresses_utilization_ratio`	Gauge	`pool`, `ip_version`	□□□□□□□□□□□0.0–1.0□
`ue_ip_allocation_failures_total`	Counter	`ip_version`, `reason`	UE IP □□□□□□□□□□□□□□□

□□□

```
# □□□□□□ 80% □□
ue_pool_addresses_utilization_ratio > 0.8

# □□□□□□□□□□□□□□
sum(rate(ue_ip_allocation_failures_total[5m])) by (reason)
```

□□□□□

S5/S8 (GTP-C) □□□

□□□□	□□	□□	□□
`s5s8_inbound_messages_total`	Counter	`message_type`	□□□ S5/S8 □ □
`s5s8_outbound_messages_total`	Counter	`message_type`	□□□ S5/S8 □ □
`s5s8_inbound_errors_total`	Counter	`message_type`	S5/S8 □□□□□ □
`s5s8_outbound_errors_total`	Counter	`message_type`	S5/S8 □□□□□ □

□□□□□

- `create_session_request`
- `create_session_response`
- `delete_session_request`
- `delete_session_response`
- `create_bearer_request`
- `delete_bearer_request`

Sxb (PFCP) □□□

□□□□	□□	□□	□□
`sxb_inbound_messages_total`	Counter	`message_type`	□□□ PFCP □ □
`sxb_outbound_messages_total`	Counter	`message_type`	□□□ PFCP □ □
`sxb_inbound_errors_total`	Counter	`message_type`	PFCP □ □□□□□
`sxb_outbound_errors_total`	Counter	`message_type`	PFCP □ □□□□□
`sxb_outbound_responses_total`	Counter	`message_type`, `cause_code_class`, `peer_ip`	□□□ PFCP □ □□□ PFCP □ □ ��□□□□ UPF □□ □□□

□□□□□

- `association_setup_request`
- `association_setup_response`
- `heartbeat_request`
- `heartbeat_response`
- `session_establishment_request`
- `session_establishment_response`
- `session_modification_request`
- `session_deletion_request`

Gx (Diameter) □□□

□□□□□	□□	□□	□□
`gx_inbound_messages_total`	Counter	`message_type`	□□□ Diameter □□
`gx_outbound_messages_total`	Counter	`message_type`	□□□ Diameter □□
`gx_inbound_errors_total`	Counter	`message_type`	Diameter □□□□□□
`gx_outbound_errors_total`	Counter	`message_type`	Diameter □□□□□□
`gx_outbound_responses_total`	Counter	`message_type`, `result_code_class`, `diameter_host`	□□□ Diameter □□□□□□□ □□□□□□□ □□□

□□□□□

- `gx_CCA` (□□□□□□□)
- `gx_CCR` (□□□□□□□)
- `gx_RAA` (□□□□□□□)
- `gx_RAR` (□□□□□□□)

□□□□□□□□□ `gx_outbound_responses_total`□□

- `2xxx` - □□□□□□□□2001 DIAMETER_SUCCESS□
- `3xxx` - □□□□□□□□3001 DIAMETER_COMMAND_UNSUPPORTED□
- `4xxx` - □□□□□□□□4001 DIAMETER_AUTHENTICATION_REJECTED□
- `5xxx` - □□□□□□□□5012 DIAMETER_UNABLE_TO_COMPLY□

□□□□□

```
# □□ Gx □□□□□
sum(rate(gx_outbound_responses_total{result_code_class="2xxx"}[5m]))
sum(rate(gx_outbound_responses_total[5m])) * 100

# □ PCRF □□□□□□
rate(gx_outbound_responses_total{result_code_class!="2xxx"}[5m]) by (

# □□□□□□□□□□□□□□□□□
gx_outbound_responses_total{message_type="gx_RAA",result_code_class="

# □□□□ PCRF □□□□□□□□□
rate(gx_outbound_responses_total{result_code_class=~"4xxx|5xxx",diame
[5m]) > 0.1
```

Gy (Diameter) □□□

Gy □□□□ (OCS) □□□□□□□□□□□□□□□□□□□□□□ Diameter Gy□

□□□□	□□	□□	□□
`gy_inbound_messages_total`	Counter	`message_type`	□□□ Gy □□
`gy_outbound_messages_total`	Counter	`message_type`	□□□ Gy □□
`gy_inbound_errors_total`	Counter	`message_type`	Gy □□ □□□□
`gy_outbound_errors_total`	Counter	`message_type`	Gy □□ □□□□
`gy_inbound_responses_total`	Counter	`cc_request_type`, `result_code_class`, `diameter_host`	□ OCS □□□□□ □□□□ □□□□□ □□□□□ □□□□□ OCS □ □□□
`gy_outbound_responses_total`	Counter	`message_type`, `result_code_class`, `diameter_host`	□□□ OCS □ □□□□ OCS RAR □ □□□□□ □□□□□ □□□□□ □ OCS □□□□
`gy_usage_clamped_total`	Counter	-	CCR-T □□□□□ □□□□□

□□□□	□□	□□	□□
			□□□□□□ □□□□□□ □□□□□□ □□□□□□ □□□□□ OCS □ □□□

□□□□□□`message_type`□□

- `ro_CCR` (□□□□□□□)
- `ro_CCA` (□□□□□□□)
- `ro_RAR` (□□□□□□□)
- `ro_RAA` (□□□□□□□)

CC-□□□□□`cc_request_type`□□□ `gy_inbound_responses_total`□□

- `initial` - □ CCR-I □□□□□□□□□□□□□□□□□□□
- `update` - □ CCR-U □□□□□□□□□□□□□□□□□□□
- `termination` - □ CCR-T □□□□□□□□□□□□□□□□
- `event` - □□□□□□□ CCR □□□

□□□□□□□□□□ `gy_inbound_responses_total` □ `gy_outbound_responses_total`□□□ Gx □□□□□□`2xxx`□`3xxx`□`4xxx`□`5xxx`□`other`□□□ Gy □□`4012` DIAMETER_CREDIT_LIMIT_REACHED □ `4xxx`□`5030` DIAMETER_USER_UNKNOWN □ `5xxx`□

`result_code_class` □ CCA □□□□□□□□□OCS □□□□□□□□□ `2001`□□□□□□□□□□□□□□□□□□

```
# □□□□□□□□ CCA □□□
sum by (cc_request_type) (rate(gy_inbound_responses_total{result_code
[5m]))
  / sum by (cc_request_type) (rate(gy_inbound_responses_total[5m])) *

# □ OCS □□□□□□□□ CCR-I□OCS □□□□□□□□
sum by (diameter_host)
(rate(gy_inbound_responses_total{cc_request_type="initial",result_cod
[5m]))

# □□□ CCR □□□□ CCA□OCS □□□□□□□□□□ PGW-C □□
sum by (instance) (rate(gy_outbound_messages_total{message_type="ro_C
  - sum by (instance) (rate(gy_inbound_responses_total[5m]))

# □□□ OCS □□□□□□□□□□
rate(gy_outbound_responses_total{message_type="ro_RAA",result_code_cl
[5m])
```

Gn/Gp (GTPv1-C) □□□

Gn/Gp GGSN □□□□□□□□□□□2G/3G SGSN □□□□□□ Gn □□□□□□□□□□□ Gn □□□

□□□□	□□	□□	□□
`gn_inbound_messages_total`	Counter	`message_type`	□□□ Gn/Gp □□ □□□ SGSN□
`gn_outbound_messages_total`	Counter	`message_type`	□□□ Gn/Gp □□ □□ SGSN□
`gn_inbound_errors_total`	Counter	`message_type`	Gn/Gp □□□□□□
`gn_outbound_errors_total`	Counter	`message_type`	□□□ SGSN □ Gn/Gp □□□□

□□□□□

□□□□	□□	□□	□□
`rescues_total`	Counter	`module`, `function`	□□□□□□□□□□□□□

□□□□

□□□□□□□□□□□□

□□□□	□□	□□	
`s5s8_inbound_handling_duration`	Histogram	`request_message_type`	S [[
`gn_inbound_handling_duration`	Histogram	`request_message_type`	G ([[[
`sxb_inbound_handling_duration`	Histogram	`request_message_type`	P [[
`gx_inbound_handling_duration`	Histogram	`request_message_type`	G ([[[
`gy_inbound_handling_duration`	Histogram	`request_message_type`	G ([[[

□□□□□□□□□□

□□□□	□□	□□
`s5s8_outbound_transaction_duration`	Histogram	`request_message_type`
`gn_outbound_transaction_duration`	Histogram	`request_message_type`
`sxb_outbound_transaction_duration`	Histogram	`request_message_type`
`gx_outbound_transaction_duration`	Histogram	`request_message_type`
`gy_outbound_transaction_duration`	Histogram	`request_message_type`

□□□□□

- □□0.0001, 0.0005, 0.001, 0.005, 0.01, 0.05, 0.1, 0.5, 1.0, 5.0
- □100µs, 500µs, 1ms, 5ms, 10ms, 50ms, 100ms, 500ms, 1s, 5s□

□□□

```
# 95th □□□ S5/S8 □□
histogram_quantile(0.95,
  rate(s5s8_inbound_handling_duration_bucket[5m])
)

# □□ PFCP □□
rate(sxb_inbound_handling_duration_sum[5m]) /
rate(sxb_inbound_handling_duration_count[5m])
```

UPF □□□□

UPF □□□□□

□□□□	□□	□□	□□
`upf_peers_total`	Gauge	-	□□□ UPF □□□□□
`upf_peers_healthy`	Gauge	-	□□□ UPF □□□□□□□□□□ + □□□□□
`upf_peers_unhealthy`	Gauge	-	□□□□ UPF □□□□□
`upf_peers_associated`	Gauge	-	□□□□ PFCP □□□ UPF □□□□□
`upf_peers_unassociated`	Gauge	-	□□ PFCP □□□ UPF □□□□□
`upf_peer_associated`	Gauge	`peer_ip`	□□ UPF □□□□□□ PFCP □□□1/0□
`upf_peer_healthy`	Gauge	`peer_ip`	□□ UPF □□□□□□1= □□□0=□□□
`upf_peer_missed_heartbeats`	Gauge	`peer_ip`	□□ UPF □□□□□□□□□
`upf_heartbeat_rtt`	Histogram	`peer_ip`	PFCP □□□/□□□□□□ □□□

□□□

```
# □□ UPF □□□
upf_peers_healthy / upf_peers_total

# □□□□□□□ UPF □□□□
upf_peers_unhealthy > 0

# □□□□ UPF □□
upf_peer_healthy{peer_ip="10.98.0.20"}

# □□□□□□□□ UPF
upf_peer_missed_heartbeats > 2
```

□□□□□

```yaml
# □ UPF □□□□□□□□
- alert: UPF_Peer_Down
  expr: upf_peer_healthy == 0
  for: 1m
  labels:
    severity: critical
  annotations:
    summary: "UPF {{ $labels.peer_ip }} □□□"
    description: "UPF □□□□□□□ PFCP □□"

# □□□ UPF □□□□□□□□
- alert: UPF_Pool_Degraded
  expr: (upf_peers_healthy / upf_peers_total) < 0.5
  for: 2m
  labels:
    severity: critical
  annotations:
    summary: "UPF □□□"
    description: "□□ {{ $value | humanizePercentage }} □ UPF □□□□"

# □□□□□□□□□□□
- alert: UPF_Heartbeat_Issues
  expr: upf_peer_missed_heartbeats > 2
  for: 30s
  labels:
    severity: warning
  annotations:
    summary: "UPF {{ $labels.peer_ip }} □□□□"
    description: "{{ $value }} □□□□□□□□"
```

P-CSCF □□□□

P-CSCF □□□□□□

□□□□	□□	□□	□□
`pcscf_fqdns_total`	Gauge	-	□□□□□ P-CSCF FQDN □□
`pcscf_fqdns_resolved`	Gauge	-	□□□□ DNS □□□ P-CSCF FQDN
`pcscf_fqdns_failed`	Gauge	-	□□□□□ P-CSCF FQDN
`pcscf_servers_total`	Gauge	-	□□□ P-CSCF □□□□□
`pcscf_servers_healthy`	Gauge	`fqdn`	□□ FQDN □□□ P-CSCF □□□
`pcscf_servers_unhealthy`	Gauge	`fqdn`	□□ FQDN □□□□ P-CSCF □□□

□□□ P-CSCF □□□□ □□□□□□□ IMS □□□□□□

Diameter □□□□□

□□□ Diameter □□□□

□���□□	□□	□□	□□
`diameter_peers_connected`	Gauge	`application`	□□□□□ Diameter □□ □□□□□□□□□□ □`gx`/`gy`/`all`□

□□□

```
# □□□ Gx (PCRF) □□□□□□□□□□□
diameter_peers_connected{application="gx"} == 0
```

□□□□□

□□□□□□

□□□□	□□	□□
`license_status`	Gauge	□□□□□□□□1 = □□□0 = □□□

□□□

```
# □□□□□□□□□□
license_status == 1

# □□□□□□□□□□□□
license_status == 0
```

□□□□□

```
- alert: PGW_C_License_Invalid
  expr: license_status == 0
  for: 1m
  labels:
    severity: critical
  annotations:
    summary: "PGW-C □□□□□□□□□"
    description: "□□□□□□□ - □□□□□□□□□"
```

□□□□□□□□□

□□ GTP-C □□□□ **“□□□□□□□” (73)**□□□□□□□□□□□□□□□□□□□□

Wireshark □□□□□□□□□□□□“□□□□□□□”□□□□□□□□□□

□□□□□

- □□□□□□□□□□□□□□□□□□□□`omnipgwc`
- □□□□□□□ URL □ `config/runtime.exs` □□ `:license_client` □□□
- □□□□□□□□ (`license_status == 0`)□□□□□□□□□□□□□□□GTP-C □□□□□ 73□□□□□□□□□
- □□□□□□□□□□□UI □□□□□□□□□
- Diameter□GTP-C □ PFCP □□□□□□□□□□
- □□□□□□□□□ - □□□□□□□□□□

□□□□

Erlang VM □□□

□□□□	□□	□□
`vm_memory_total`	Gauge	□ VM □□□□□□
`vm_memory_processes`	Gauge	□□□□□□□
`vm_memory_system`	Gauge	□□□□□□□
`vm_system_process_count`	Gauge	□ Erlang □□
`vm_system_port_count`	Gauge	□□□□□

Prometheus □□

□□□□

□ OmniPGW □□□ Prometheus `prometheus.yml`□

```
# prometheus.yml
global:
  scrape_interval: 15s
  evaluation_interval: 15s

scrape_configs:
  - job_name: 'omnipgw'
    static_configs:
      - targets: ['10.0.0.20:9090']
        labels:
          instance: 'omnipgw-01'
          environment: 'production'
          site: 'datacenter-1'
```

□□ OmniPGW □□

```yaml
scrape_configs:
  - job_name: 'omnipgw'
    static_configs:
      - targets:
          - '10.0.0.20:9090'
          - '10.0.0.21:9090'
          - '10.0.0.22:9090'
        labels:
          environment: 'production'
```

□□□□

Kubernetes□

```yaml
scrape_configs:
  - job_name: 'omnipgw'
    kubernetes_sd_configs:
      - role: pod
    relabel_configs:
      - source_labels: [__meta_kubernetes_pod_label_app]
        action: keep
        regex: omnipgw
      - source_labels: [__meta_kubernetes_pod_ip]
        target_label: __address__
        replacement: '${1}:9090'
```

□□

□□□□□

```
# □□ Prometheus □□
curl http://prometheus:9090/api/v1/targets

# □□□□□□
curl 'http://prometheus:9090/api/v1/query?
query=teid_registry_count'
```

Grafana □□□

□□□□□

1. □□ Prometheus □□□□

```
□□ → □□□ → □□□□□ → Prometheus
URL: http://prometheus:9090
```

2. □□□□□□

□□□□□□□□□□ JSON □□□

□□□□

□□ 1□□□□□

```
# □□
teid_registry_count

# □□□□□Gauge
# □□□
#   □□□< 5000
#   □□□5000-8000
#   □□□> 8000
```

□□ 2□□□□□

```
# □□
rate(s5s8_inbound_messages_total{message_type="create_session_request
[5m])

# □□□□□□□
# □□□□□/□
```

□□ 3□IP □□□□

```
# □□□□□ /24 □□□254 □ IP□
(address_registry_count / 254) * 100

# □□□□□Gauge
# □□□□□□□0-100□
# □□□
#   □□□< 70%
#   □□□70-85%
#   □□□> 85%
```

□□ 4□□□□□□95 □□□□

```
# □□
histogram_quantile(0.95,

rate(s5s8_inbound_handling_duration_bucket{request_message_type="crea
[5m])
)

# □□□□□□□
# □□□□□
```

□□ 5□□□□

```
# □□
rate(s5s8_inbound_errors_total[5m])

# □□□□□□□□□
# □□□□□/□
# □□□□□> 0.1
```

□□ 6□Gx □□□□□

```
# □□□□□□□□ Gx □□□□□□□
sum(rate(gx_outbound_responses_total{result_code_class="2xxx"}
[5m])) /
sum(rate(gx_outbound_responses_total[5m])) * 100

# □□□□□□Gauge
# □□□□□□□□0-100□
# □□□
#   □□□> 95%
#   □□□90-95%
#   □□□< 90%
```

□□ - □□□□□□□□□□□□

```
# □□□□□□□□□□□□□□□□□□□□□□
sum(rate(gx_outbound_responses_total[5m])) by (result_code_class)

# □□□□□□□□□□□□□□
# □□□□{{ result_code_class }}
```

□□ - □ PCRF □□□□□

```
# □□□□□ PCRF □□□□□□□
sum(rate(gx_outbound_responses_total[5m])) by (diameter_host,
result_code_class)

# □□□□□□□□□□□□
# □□□□{{ diameter_host }} - {{ result_code_class }}
```

□□ 7□UPF □□□□

```
# □□□□□□□□□□□□□□
(upf_peers_healthy / upf_peers_total) * 100

# □□□□□□Gauge
# □□□□□□□□□0-100□
# □□□
#   □□□100%
#   □□□50-99%
#   □□□< 50%
```

□□ - □□ UPF □□□

```
# □□□□□□ UPF □□
upf_peer_healthy

# □□□□□□Stat
# □□□
#   1 = "UP"□□□□
#   0 = "DOWN"□□□□
```

□□□□□□□□

```
{
  "dashboard": {
    "title": "OmniPGW - □□□□□□",
    "panels": [
      {
        "title": "□□□□□",
        "targets": [
          {
            "expr": "teid_registry_count",
            "legendFormat": "□□□□□"
          }
        ],
        "type": "graph"
      },
      {
        "title": "□□□□□□□□",
        "targets": [
          {
            "expr":
"rate(s5s8_inbound_messages_total{message_type=\"create_session_reque
[5m])",
            "legendFormat": "□□/□"
          }
        ],
        "type": "graph"
      },
      {
        "title": "IP □□□□□",
        "targets": [
          {
            "expr": "(address_registry_count / 254) * 100",
            "legendFormat": "□□□□□ %"
          }
        ],
        "type": "gauge"
      },
      {
        "title": "□□□□□□p95□",
        "targets": [
          {
            "expr": "histogram_quantile(0.95,
```

```
rate(s5s8_inbound_handling_duration_bucket[5m]))",
            "legendFormat": "S5/S8 p95"
          },
          {
            "expr": "histogram_quantile(0.95,
rate(sxb_inbound_handling_duration_bucket[5m]))",
            "legendFormat": "PFCP p95"
          }
        ],
        "type": "graph"
      }
    ]
  }
}
```

□□

□□□□

□□ `omnipgw_alerts.yml`□

```yaml
groups:
  - name: omnipgw
    interval: 30s
    rules:
      # □□□□□□
      - alert: OmniPGW_HighSessionCount
        expr: teid_registry_count > 8000
        for: 5m
        labels:
          severity: warning
        annotations:
          summary: "OmniPGW □□□□□"
          description: "{{ $value }} □□□□□□□□8000□"

      - alert: OmniPGW_SessionCountCritical
        expr: teid_registry_count > 9500
        for: 2m
        labels:
          severity: critical
        annotations:
          summary: "OmniPGW □□□□□□"
          description: "{{ $value }} □□□□□□□□"

      # IP □□□
      - alert: OmniPGW_IPPoolUtilizationHigh
        expr: (address_registry_count / 254) * 100 > 80
        for: 10m
        labels:
          severity: warning
        annotations:
          summary: "OmniPGW IP □□□□□"
          description: "IP □ {{ $value }}% □□□"

      - alert: OmniPGW_IPPoolExhausted
        expr: address_registry_count >= 254
        for: 1m
        labels:
          severity: critical
        annotations:
          summary: "OmniPGW IP □□□"
          description: "□□□□□□ IP"

      # □□□□□
```

```
      - alert: OmniPGW_HighErrorRate
        expr: rate(s5s8_inbound_errors_total[5m]) > 0.1
        for: 5m
        labels:
          severity: warning
        annotations:
          summary: "OmniPGW □□□□"
          description: "{{ $value }} □□/□□ S5/S8 □□"

      - alert: OmniPGW_GxErrorRate
        expr: rate(gx_inbound_errors_total[5m]) > 0.05
        for: 5m
        labels:
          severity: warning
        annotations:
          summary: "OmniPGW Gx □□"
          description: "{{ $value }} Diameter □□/□"

      # Gx □□□□
      - alert: OmniPGW_GxResponseFailureRate
        expr: |
          sum(rate(gx_outbound_responses_total{result_code_class!="2xxx"}[5m])) /
          sum(rate(gx_outbound_responses_total[5m])) > 0.1
        for: 5m
        labels:
          severity: warning
        annotations:
          summary: "OmniPGW □ Gx □□□□□"
          description: "{{ $value | humanizePercentage }} □ Gx □□□□□□ 2xxx □□□□□"

      - alert: OmniPGW_GxPCRFFailures
        expr: rate(gx_outbound_responses_total{result_code_class=~"4xxx|5xxx"}[5m]) by (diameter_host) > 0.05
        for: 3m
        labels:
          severity: warning
        annotations:
          summary: "PCRF {{ $labels.diameter_host }} □□□□□□"
          description: "{{ $value }} □□□□/□□ PCRF {{ $labels.diameter_host }}"
```

```
      # UPF □□□□
      - alert: OmniPGW_UPF_PeerDown
        expr: upf_peer_healthy == 0
        for: 1m
        labels:
          severity: critical
        annotations:
          summary: "UPF □□□ {{ $labels.peer_ip }} □□□"
          description: "UPF □□□ PFCP □□"

      - alert: OmniPGW_UPF_PoolDegraded
        expr: (upf_peers_healthy / upf_peers_total) < 0.5
        for: 2m
        labels:
          severity: critical
        annotations:
          summary: "UPF □□□"
          description: "{{ $value | humanizePercentage }} □ UPF □□
□□□< 50%□"

      - alert: OmniPGW_UPF_HeartbeatFailures
        expr: upf_peer_missed_heartbeats > 2
        for: 30s
        labels:
          severity: warning
        annotations:
          summary: "UPF {{ $labels.peer_ip }} □□□□"
          description: "{{ $value }} □□□□□□□□□"

      - alert: OmniPGW_UPF_AllDown
        expr: upf_peers_healthy == 0 and upf_peers_total > 0
        for: 30s
        labels:
          severity: critical
        annotations:
          summary: "□□ UPF □□□□□□□"
          description: "□□□□□□ UPF □□□□□□□□"

      # □□□□
      - alert: OmniPGW_HighLatency
        expr: |
          histogram_quantile(0.95,
            rate(s5s8_inbound_handling_duration_bucket[5m])
```

```
        ) > 100000
      for: 5m
      labels:
        severity: warning
      annotations:
        summary: "OmniPGW □□□□□"
        description: "p95 □□ {{ $value }}μs (> 100ms)"

    # □□□□
    - alert: OmniPGW_HighMemoryUsage
      expr: vm_memory_total > 2000000000
      for: 10m
      labels:
        severity: warning
      annotations:
        summary: "OmniPGW □□□□□"
        description: "VM □□ {{ $value | humanize }}B □□"

    - alert: OmniPGW_HighProcessCount
      expr: vm_system_process_count > 100000
      for: 10m
      labels:
        severity: warning
      annotations:
        summary: "OmniPGW □□□□□"
        description: "{{ $value }} Erlang □□□□□□□□"
```

AlertManager □□

```yaml
# alertmanager.yml
global:
  resolve_timeout: 5m

route:
  receiver: 'ops-team'
  group_by: ['alertname', 'instance']
  group_wait: 10s
  group_interval: 10s
  repeat_interval: 12h

  routes:
    - match:
        severity: critical
      receiver: 'pagerduty'

    - match:
        severity: warning
      receiver: 'slack'

receivers:
  - name: 'ops-team'
    email_configs:
      - to: 'ops@example.com'

  - name: 'slack'
    slack_configs:
      - api_url:
'https://hooks.slack.com/services/YOUR/SLACK/WEBHOOK'
        channel: '#omnipgw-alerts'
        title: 'OmniPGW □□□{{ .GroupLabels.alertname }}'
        text: '{{ range .Alerts }}{{ .Annotations.description }}{{
end }}'

  - name: 'pagerduty'
    pagerduty_configs:
      - service_key: 'YOUR_PAGERDUTY_KEY'
```

□□□□

□□□□□□ (KPI)

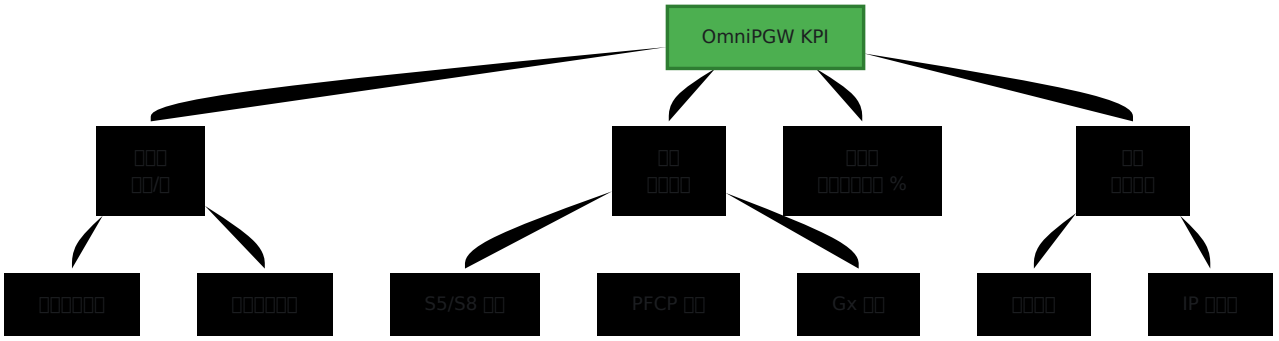

□□□□□

□□□□□□□□

```
rate(s5s8_inbound_messages_total{message_type="create_session_request
[5m])
```

□□□□□□□□

```
rate(s5s8_inbound_messages_total{message_type="delete_session_request
[5m])
```

□□□□□□□

```
rate(s5s8_inbound_messages_total{message_type="create_session_request
[5m]) -
rate(s5s8_inbound_messages_total{message_type="delete_session_request
[5m])
```

□□□□

□□□□□□□□□□□□□□

```
# p50□□□□□
histogram_quantile(0.50,
  rate(s5s8_inbound_handling_duration_bucket[5m])
)

# p95
histogram_quantile(0.95,
  rate(s5s8_inbound_handling_duration_bucket[5m])
)

# p99
histogram_quantile(0.99,
  rate(s5s8_inbound_handling_duration_bucket[5m])
)
```

□□□□□□□□□□□□

```
histogram_quantile(0.95,
  rate(s5s8_inbound_handling_duration_bucket[5m])
) by (request_message_type)
```

□□□□

□□□□□□□□**24**□□□□

```
teid_registry_count -
teid_registry_count offset 24h
```

□□□□□

```
# □□□□□□□□ 10,000 □□
10000 - teid_registry_count
```

□□□□□□□□□□□

```
# □□□□□□□□□□□□□□ 1 □□□□□□□
(10000 - teid_registry_count) /
(rate(teid_registry_count[1h]) * 86400)
```

□□□□□□

□□□□

□□□□□□□□□□

□□□

```
rate(s5s8_inbound_errors_total[5m]) by (message_type)
```

□□□

- □□□□□□□
- □□ PCRF □□□□Gx □□□
- □□ IP □□□

□□□□□□□□□□

□□□

```
histogram_quantile(0.95,

rate(s5s8_inbound_handling_duration_bucket{request_message_type="crea
[5m])
)
```

□□□

- □□ Gx □□□PCRF □□□□□
- □□ PFCP □□□PGW-U □□□□□

- □□□□□□□□□□□□

□□□**PCRF** □□□□

□□□

```
# □□ Gx □□□□□□
sum(rate(gx_outbound_responses_total{result_code_class!="2xxx"}
[5m])) /
sum(rate(gx_outbound_responses_total[5m])) * 100

# □ PCRF □□□□
sum(rate(gx_outbound_responses_total[5m])) by (diameter_host,
result_code_class)

# □□□□□□□□□
rate(gx_outbound_responses_total{result_code_class="5xxx"}[5m]) by
(diameter_host)
```

□□□

- □□ PCRF □□□□□□□□
- □□ PCRF □□□□□□□□□5xxx □□□□□□□□□□□
- □□ Diameter □□□□□
- □□ PCRF □□□□□□□□□□
- □□ 5012□DIAMETER_UNABLE_TO_COMPLY□□□□□□□□□□□□

□□□□□□□□□

□□□

```
# □□□□□
rate(vm_memory_total[1h])

# □□□□□□
rate(vm_memory_processes[1h])

# □□□□□□
rate(vm_system_process_count[1h])
```

□□□

- □□□□□□□
- □□□□□□□
- □□□□□□□□□□□

□□□□

□□□□□□□□□□

```
max_over_time(teid_registry_count[24h])
```

□□□□□□□□□

```
teid_registry_count /
avg_over_time(teid_registry_count[7d])
```

□□□□□

```
abs(
  teid_registry_count -
  avg_over_time(teid_registry_count[1h])
) > 100
```

□□□□

□□□□

1. □□□□□ 15-30 □□□□□□□□□□
2. □□□ 15 □□□□□□□□□
3. □□□ □□□□□□□□□□□□□□□□□□□

□□□□□

1. □□□□□□ - □□ NOC □□□ KPI
2. □□□□□□ - □□□□□□□□
3. □□□□□□□□ - □□□□□□□□

□□□□

1. □□□□□□□ - □□□□□□□□□□□□□□
2. □□ - □□ → □□□□□□□□□□
3. □□□ - □□□□□□□□□□□□□□□

□□□□

□□□□□

- □□□□ - Prometheus □□□□□OAM REST API □□
- □□□□□□□ - □□□□□□□□□

□□□□

- **PFCP □□** - PFCP □□□□□UPF □□□□
- **Diameter Gx □□** - Gx □□□□□PCRF □□□□
- **Diameter Gy □□** - Gy □□□□□□□□□□OCS □□
- **S5/S8 □□** - GTP-C □□□□□SGW-C □□

□□□□

- **P-CSCF □□** - P-CSCF □□□□□IMS □□
- □□□□ - □□□□□□□□□□□□□
- **UE IP □□** - IP □□□□□□

□□□□□□

OmniPGW □□□□ - *□ Omnitouch □□□□□□*

□□□□□□ (PCO)

□□□ **UE** □□□□□

OmniPGW □ Omnitouch □□□□□

□□

PCO (□□□□□□) □□ PDN □□□□□□□□□ UE (□□□□) □□□□□□□□□□□ UE □□□□□□□□□□ DNS□ IMS□□□□□□□□□

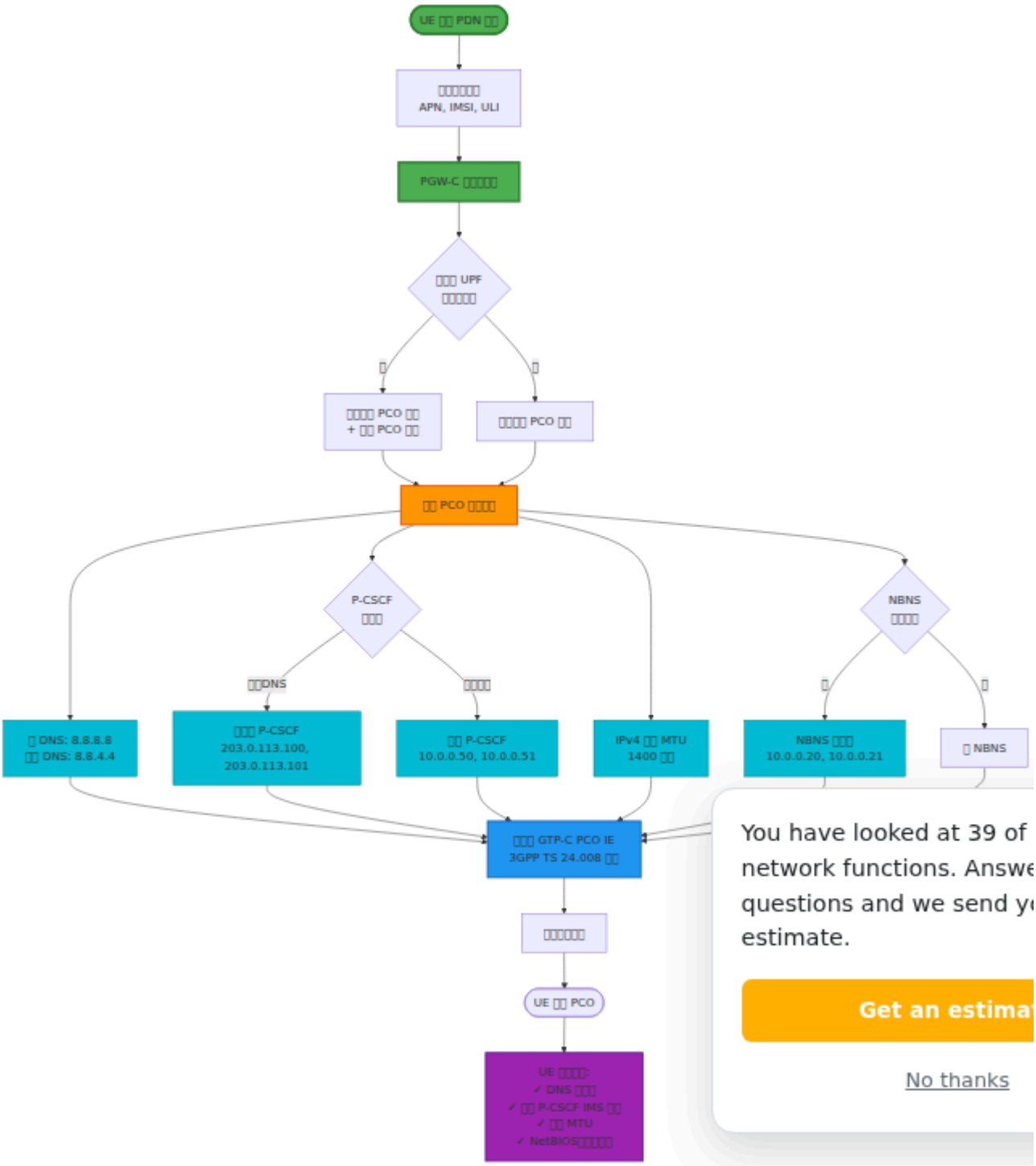

OmniPGW □□□ PCO □□ (□□ → MS)□

IE □□	□□ ID	□□	□□
DNS □□□ IPv4 □□	0x000D	□ DNS	□
DNS □□□ IPv4 □□	0x000D	□□ DNS	□□
DNS □□□ IPv6 □□	0x0003	□/□□ DNS (IPv6)	□□
P-CSCF IPv4 □□	0x000C	IMS □ P-CSCF (□□□□□□□□)	□□ (IMS)
P-CSCF IPv6 □□	0x0001	IMS □ P-CSCF (□□□□□□□□)	□□ (IMS)
IPv4 □□ MTU	0x0010	□□□□□□	□□

> □□ **IPCP □ DNS/NBNS**□ □ UE □□ **IPCP** (□□□□□□□□□□□□□ `0x8021`) □□□□□□□□ DNS □□□□ DNS (□ NBNS/WINS) □□□□□OmniPGW □ IPCP □□□□ □□□□□□□□□□□□□□ IPCP □□ `ms_dns1`/`ms_dns2` □ `ms_wins1`/`ms_wins2` (RFC 1877)□□□□ NBNS/WINS □□□□ IPCP □□□□——□□□□□ NBNS PCO □□ (`0x0011`) □□□□□□□□□□ (□□□□□) □□□ PGW □□□□□□ UE □ `0.0.0.0` □□□□□□□□□□□□□□□□ IPCP □□□ (RFC 1661 §5)□

> **IPv4 □ IPv6 P-CSCF / DNS□□ E-CSCF**□ OmniPGW □□□□ IPv4 □ IPv6 P-CSCF □□□□□□□□□□□□□□□□□□□□□□□□□□IPv4 □□□□ `0x000C`□IPv6 □□□□ `0x0001`□ IPv6 P-CSCF □□ (`p_cscf_ipv6_address_request`) □ `p_cscf_ipv6_address_list` (□ DNS/AAAA □□□□□ IPv6 □□) □□□□ IPv6 DNS □□ (`dns_server_ipv6_address_request`) □□□ `0x0003` □□ `primary_dns_server_ipv6_address` / `secondary_dns_server_ipv6_address` □□□□□□□□□□□□□□□□□□□□□□□□ E-CSCF □□□ □□□□□□□□□□□□□□□ APCO (□□ PCO)□

□□

□□□□

```
# config/runtime.exs
config :pgw_c,
  pco: %{
    # DNS □□□ (□□)
    primary_dns_server_address: "8.8.8.8",
    secondary_dns_server_address: "8.8.4.4",

    # IPv6 DNS □□□ (□□□□□ 0x0003)
    primary_dns_server_ipv6_address: nil,
    secondary_dns_server_ipv6_address: nil,

    # NBNS □□□ (□□□□□□ Windows □□)
    primary_nbns_server_address: nil,
    secondary_nbns_server_address: nil,

    # IMS/VoLTE □ P-CSCF □□ (□□)
    p_cscf_ipv4_address_list: [],   # □□ 0x000C
    p_cscf_ipv6_address_list: [],   # □□ 0x0001

    # P-CSCF □□□□ (□□□□□ A □ AAAA □□)
    p_cscf_discovery_enabled: false,
    p_cscf_discovery_dns_server: nil,
    p_cscf_discovery_timeout_ms: 5000,

    # IPv4 MTU □□ (□□)
    ipv4_link_mtu_size: 1400
  }
```

PCO □□

DNS □□□□□

□ DNS □□□ DNS□

```
pco: %{
  primary_dns_server_address: "8.8.8.8",
  secondary_dns_server_address: "8.8.4.4"
}
```

□□ DNS □□□□

□□□	□	□□
Google	8.8.8.8	8.8.4.4
Cloudflare	1.1.1.1	1.0.0.1
Quad9	9.9.9.9	149.112.112.112
OpenDNS	208.67.222.222	208.67.220.220

□□ DNS□

```
pco: %{
  primary_dns_server_address: "10.0.0.10",
  secondary_dns_server_address: "10.0.0.11"
}
```

P-CSCF □□ (IMS)

□□ IMS/VoLTE □□□

```
pco: %{
  p_cscf_ipv4_address_list: [
    "10.0.0.50",  # □ P-CSCF (IPv4, □□ 0x000C)
    "10.0.0.51"   # □□ P-CSCF
  ],
  # IPv6 P-CSCF □□ (□□ 0x0001) □□□ IPv6/IPv4v6 IMS PDN
  p_cscf_ipv6_address_list: [
    "2001:db8::50",
    "2001:db8::51"
  ]
}
```

□□□□□□□□□□□□□□□□□□□□□□□□ UE □□□□□——IPv4 P-CSCF □□□□ `0x000C` □□□IPv6 P-CSCF □□□□ `0x0001` □□□□□ IMS PDN □□□□□□□□

P-CSCF (□□□□□□□□□□)□

- IMS □□□□□□
- VoLTE□VoWiFi□RCS □���
- UE □□□□□□□□ SIP

P-CSCF □□□□

□□ DNS □ P-CSCF □□□

OmniPGW □□□□ DNS □□□□□□ P-CSCF □□□□ 3GPP TS 23.003 □ TS 24.229 □□□□□□□□□□PGW-C □□□□ DNS □□□ P-CSCF □□□□□□□□□□□□□□

```
pco: %{
  # □□□□□ P-CSCF □□
  p_cscf_discovery_enabled: true,

  # P-CSCF □□□ DNS □□□ (□□□□)
  p_cscf_discovery_dns_server: {10, 179, 2, 177},

  # DNS □□□□□□ (□□)
  p_cscf_discovery_timeout_ms: 5000,

  # □□ P-CSCF □□ (□□ DNS □□□□□□)
  p_cscf_ipv4_address_list: ["10.0.0.50"]
}
```

□□□□□

1. □ `p_cscf_discovery_enabled: true` □□PGW-C □□ DNS □□□□□ P-CSCF □□
2. DNS □□□□□□□□ `p_cscf_discovery_dns_server`
3. □□ DNS □□□□□□□□ P-CSCF □□□□ PCO □□□ UE
4. □□ DNS □□□□□□□□□□□□□□□ `p_cscf_ipv4_address_list`
5. □□□ P-CSCF □□ □□□□□□□□□□□□

P-CSCF □□□□

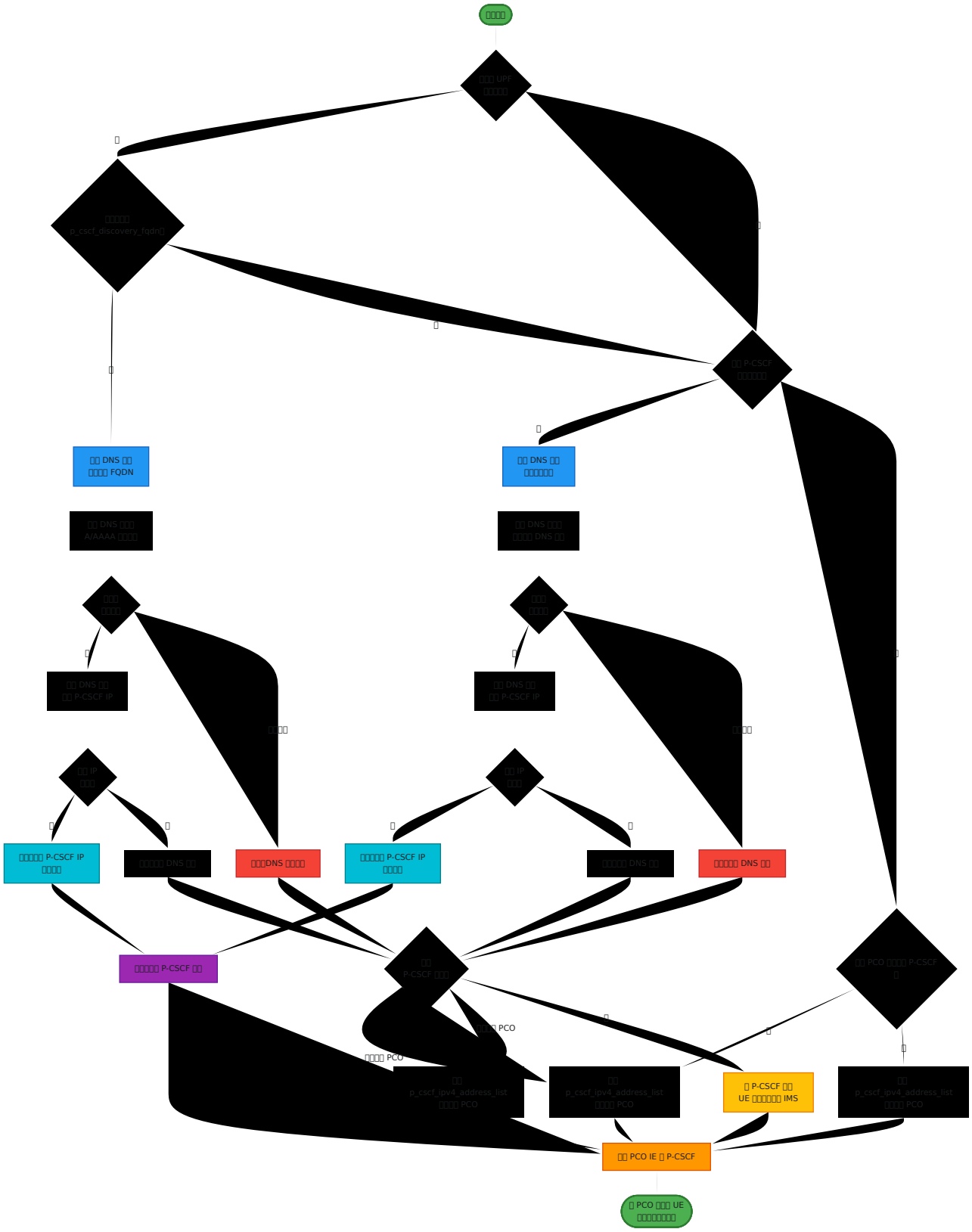

□□□□□□□

1. □□□ **FQDN** □□ (□□□□□□) - `p_cscf_discovery_fqdn` □ UPF □□□□□
2. □□ **DNS** □□ - `p_cscf_discovery_enabled: true` □□□ PCO □□□

3. □□ **PCO** □□□□ - `p_cscf_ipv4_address_list` □□□ PCO □□□
4. □□ **PCO** □□□□ (□□) - `p_cscf_ipv4_address_list` □□□ PCO □□□

□□□

□□ P-CSCF □□□□□□□□□□□□□□□□

- DNS □□□□/□□□
- □□□□
- □□□□□□□
- □□□□□□□□□□

□□□ P-CSCF □□ □□□□□□□□□□□□□□

□□□□□

□□	□□	□□□	□□
`p_cscf_discovery_enabled`	□□□	`false`	□□□□ DNS □□□ P-CSCF □□
`p_cscf_discovery_dns_server`	□□ (IP)	`nil`	DNS □□□ IP □□□□ 4 □□ (□ □□ `{10, 179, 2, 177}`)
`p_cscf_discovery_timeout_ms`	□□	`5000`	DNS □□□□□□□□□

□□□

- □□ **IMS** □□ - P-CSCF □□□□ DNS □□□□
- □□□□□□ - DNS □□□□□ P-CSCF □□□
- □□□□ - DNS □□□□□□□ P-CSCF □□□
- □□□□□ - □□□□□□□□□□□ P-CSCF □□□

□□□□□ **DNS** □□□□□ **IMS**

```
pco: %{
  primary_dns_server_address: "10.0.0.10",
  secondary_dns_server_address: "10.0.0.11",

  # □□□□ P-CSCF □□
  p_cscf_discovery_enabled: true,
  p_cscf_discovery_dns_server: {10, 179, 2, 177},  # IMS DNS □□□
  p_cscf_discovery_timeout_ms: 3000,

  # □□ P-CSCF □□ (□□ DNS □□)
  p_cscf_ipv4_address_list: [
    "10.0.0.50",  # □□□
    "10.0.0.51"   # □□□□
  ],

  ipv4_link_mtu_size: 1400
}
```

□□□ **P-CSCF** □□□

P-CSCF □□□□□□□ UPF □□□□□□□□□□□□□□□ APN □□□□□ DNS □□□□□ P-CSCF □□□

```
# □ upf_selection □□□
rules: [
  %{
    name: "IMS □□",
    priority: 20,
    match_field: :apn,
    match_regex: "^ims",
    upf_pool: [...],

    # □□□ P-CSCF □□
    p_cscf_discovery_fqdn: "pcscf.mnc001.mcc001.3gppnetwork.org"
  }
]
```

□□□ UPF □□□□ □□□□□□ P-CSCF □□□□□□□□

□□□ P-CSCF □□ □□□ P-CSCF □□□□□□□

NBNS □□□ (NetBIOS)

□□ Windows □□□□□□

```
pco: %{
  primary_nbns_server_address: "10.0.0.20",
  secondary_nbns_server_address: "10.0.0.21"
}
```

□□□□□

- □□□□□□ Windows □□
- □□□□□□□□□□
- □□ NetBIOS □□□□

□□ MTU □□

□□□□□□□

```
pco: %{
  ipv4_link_mtu_size: 1400  # □□
}
```

□□ MTU □□

MTU	□□
1500	□□□□□ (□□□)
1400	□□ GTP □□□□
1420	□□□□
1280	IPv6 □□ MTU
1360	VPN/□□□□

□□□ □□ LTE □□ **1400** □□□ GTP-U □□□

□□□□

Internet APN

```
pco: %{
  primary_dns_server_address: "8.8.8.8",
  secondary_dns_server_address: "8.8.4.4",
  ipv4_link_mtu_size: 1400
}
```

IMS APN

```
pco: %{
  primary_dns_server_address: "10.0.0.10",
  secondary_dns_server_address: "10.0.0.11",
  p_cscf_ipv4_address_list: [
    "10.0.0.50",
    "10.0.0.51"
  ],
  ipv4_link_mtu_size: 1400
}
```

□□ P-CSCF □□ □□□ IMS □□□□□□ P-CSCF □□□□

□□ APN

```
pco: %{
  primary_dns_server_address: "10.100.0.10",
  secondary_dns_server_address: "10.100.0.11",
  primary_nbns_server_address: "10.100.0.20",
  secondary_nbns_server_address: "10.100.0.21",
  ipv4_link_mtu_size: 1400
}
```

PCO □ GTP-C □□□□□□

□□□□□□

OmniPGW □ □□□□□□ □□□□□ PCO□

```
□□□□□□□
├── □□: □□□□□□
├── UE IP □□: 100.64.1.42
├── PCO (□□□□□□□)
│   ├── DNS □□□ IPv4 □□: 8.8.8.8
│   ├── DNS □□□ IPv4 □□: 8.8.4.4
│   ├── P-CSCF IPv4 □□: 10.0.0.50
│   ├── P-CSCF IPv4 □□: 10.0.0.51
│   └── IPv4 □□ MTU: 1400
```

UE □□

UE □□ PCO □□

1. □□□□□□□□□□□ DNS □□□
2. □ P-CSCF □□ IMS □□
3. □□□ MTU □□□□□□

□□□□

□□□UE □□□□□ DNS

□□□

- UE □ IP □□□□□□□□□□□□□
- DNS □□□□

□□□□□

1. PCO □□□□ DNS □□□□□□□□□
2. □ UE IP □□□□□ DNS □□□
3. □□□□□ DNS □□

□□□□□

```
# □□ DNS □□□□□□□
ping 8.8.8.8

# □□ UE □□□□ DNS □□
nslookup google.com 8.8.8.8

# □□ PCO □□
grep "primary_dns_server_address" config/runtime.exs
```

□□□IMS □□□□

□□□

- VoLTE □□□□
- UE □□ "□ IMS □□"

□□□□□

1. □□ P-CSCF □□
2. P-CSCF IP □□□□□
3. P-CSCF □□□□

□□□□□

```
# □□ P-CSCF □□
pco: %{
  p_cscf_ipv4_address_list: ["10.0.0.50"]  # □□□□□
}
```

□□□MTU □□

□□□

- □□□□□□□□□□□□□□□□□□
- □□□□□□□□
- □□□□

□□□□□

- MTU □□□□□□□□
- MTU □□□□□□□□

□□□□□

```
# □□□□□ GTP □□□□ 1400
pco: %{
  ipv4_link_mtu_size: 1400
}

# □□□□□□□□□□□□□□□□□□
pco: %{
  ipv4_link_mtu_size: 1360
}
```

□□□□

DNS □□

1. □□□□□□ **DNS** □□□
   - □□□Google (8.8.8.8)□Cloudflare (1.1.1.1)
   - □□□□□□□□□ DNS
2. □□□□□□□
   - □□□□
   - □□□□□
3. □□ **DNS** □□□
   - □□ DNSSEC □□□□
   - □□□□□□ DNS □□

IMS □□

1. □□□□ **P-CSCF**
   - □□ 2 □□□□□□□
   - □□□□□□□□□□□□□
2. □□□□□
   - P-CSCF □□□□□□ UE IP □□□
   - □□ SIP □□□

MTU □□

1. □□□□
   - GTP-U□36 □□ (IPv4)
   - IPsec□□□ (50-100 □□)

2. □□ **LTE MTU**
    - □□□**1400** □□
    - □□□□□□□□□□
3. □□□□□□□□

    - □□ MTU □□
    - □□□□□□□□□□□

□□□□

□□□□

- □□□□ - □□□ runtime.exs □□□UPF □□□ PCO □□
- **UE IP □□** - IP □□□□□□ APN □□□
- **P-CSCF □□** - P-CSCF □□□□□□□□□□□□

□□□□□□□

- □□□□ - PDN □□□□□□□□□□□
- **S5/S8 □□** - GTP-C □□□PCO □□□□□
- **PFCP □□** - □□□□□□□□

IMS □ VoLTE

- **Diameter Gx □□** - IMS □□□□□□□
- □□□□ - □ PCO □□□□□□□□□

□□□□□□

OmniPGW PCO □□ - *□ Omnitouch □□□□□*

P-CSCF □□□□□

□□ **P-CSCF** □□□□□□□□□□

OmniPGW □ Omnitouch □□□□□□

□□

P-CSCF (□□□□□□□□□□) □□□□□ □□ DNS SRV □□□□□ SIP OPTIONS □□□□□□ IMS P-CSCF □□□□□□□□□□□□□□□□

- □□□ **P-CSCF** □□□□□□□□□□□□□□□ P-CSCF □□□
- □□□□□□□□□□□□□ DNS □□□□ 60 □□□□
- **SIP OPTIONS** □□□□□□□ SIP OPTIONS ping □□ P-CSCF □□□□□□□
  - □□□□ **TCP**□□□□□ TCP □□ SIP OPTIONS□□□□□□□
  - **UDP** □□□□□ TCP □□□□□□ UDP
  - □□□□□□□□□□□□□□□□□□ :up □ :down
- □□□□□□□OAM API □□□□□□□□□□ IP □□□□□
- □□□□□□□□□□□□□□□□□□□
- **Prometheus** □□□□□ Prometheus □□□□□□□□□□

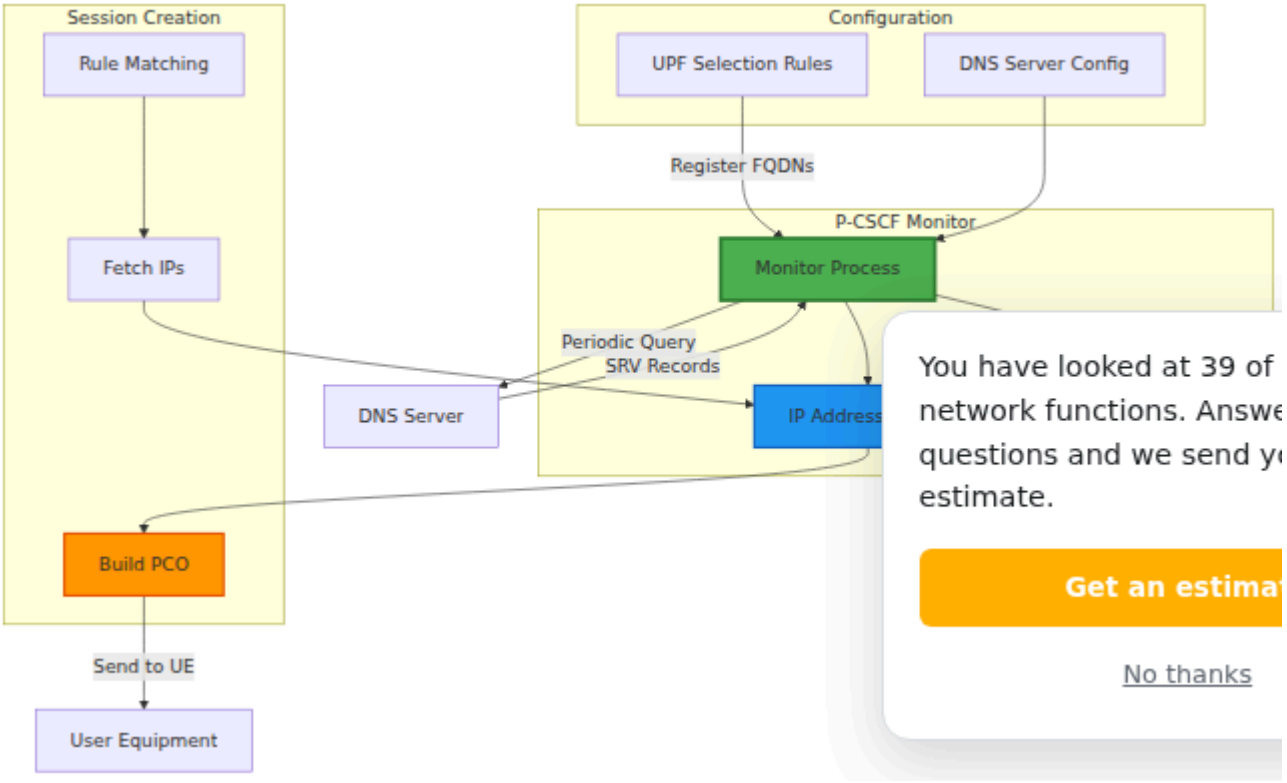

□□

1. □□□□
2. □□
3. □□□□
4. OAM API □□
5. □□□□□□□
6. □□□□
7. DNS □□
8. □□□□
9. □□□□

□□□□

□□□□

```
# config/runtime.exs

# □□ PCO □□□□□□ P-CSCF □□□ DNS □□□□
config :pgw_c,
  pco: %{
    p_cscf_discovery_dns_server: "192.0.2.177",
    p_cscf_discovery_enabled: true,
    p_cscf_discovery_timeout_ms: 5000
  },

  upf_selection: %{
    rules: [
      # IMS □□ - □□ P-CSCF □□
      %{
        name: "IMS Traffic",
        priority: 20,
        match_field: :apn,
        match_regex: "^ims",
        upf_pool: [
          %{remote_ip_address: "10.100.2.21", remote_port: 8805,
weight: 80}
        ],
        # P-CSCF □□ FQDN□□□□□ UPF □□□□□□□□□□□□□□
        p_cscf_discovery_fqdn:
"pcscf.mnc001.mcc001.3gppnetwork.org",
        # □□□□□□□□□ PCO □□□□□
        pco: %{
          p_cscf_ipv4_address_list: ["203.0.113.100",
"203.0.113.101"]
        }
      }
    ]
  }
```

□□□ □□□□ □□□□□□ UPF □□□□□□□□□ PCO □□ □□□□□ P-CSCF □□□□□

□□□□

1. □□ OmniPGW
2. □□ OAM API□`curl -k https://localhost:8443/api/pcscf_monitor`
3. □□□□□□□□□□□□□□□ IP□□□□□□□□□□□□□□□□□□

□□

□□ P-CSCF □□□□

□ PCO □□□□□□□ P-CSCF □□□ DNS □□□□

```
pco: %{
  # □□ P-CSCF □□□ DNS □□□□□□□□□ UE □ DNS □□□
  p_cscf_discovery_dns_server: "192.0.2.177",

  # □□ P-CSCF DNS □□□□
  p_cscf_discovery_enabled: true,

  # DNS SRV □□□□□□□□□
  p_cscf_discovery_timeout_ms: 5000,

  # □□ P-CSCF □□□□□□□□
  p_cscf_ipv4_address_list: ["203.0.113.146"]
}
```

□□□ P-CSCF FQDN

□□ UPF □□□□□□□□□□□□□ P-CSCF □□ FQDN□

```
upf_selection: %{
  rules: [
    # IMS □□ - IMS □□ P-CSCF
    %{
      name: "IMS Traffic",
      match_field: :apn,
      match_regex: "^ims",
      upf_pool: [...],
      p_cscf_discovery_fqdn:
"pcscf.ims.mnc001.mcc001.3gppnetwork.org",
      pco: %{
        p_cscf_ipv4_address_list: ["203.0.113.100"]  # □□
      }
    },

    # □□ - □□□□ P-CSCF
    %{
      name: "Enterprise Traffic",
      match_field: :apn,
      match_regex: "^enterprise",
      upf_pool: [...],
      p_cscf_discovery_fqdn: "pcscf.enterprise.example.com",
      pco: %{
        p_cscf_ipv4_address_list: ["192.168.1.50"]  # □□
      }
    },

    # □□□ - □ P-CSCF □□□□□□□□□□
    %{
      name: "Internet Traffic",
      match_field: :apn,
      match_regex: "^internet",
      upf_pool: [...]
      # □ p_cscf_discovery_fqdn - □□□□ PCO □□
    }
  ]
}
```

□□□□

□□□□

1. □□□□□□□

    - P-CSCF □□ GenServer □□□
    - □□□□□□□ UPF □□□□□□□□□□□□□□ P-CSCF FQDN

2. **FQDN** □□

    - □□□□□□ FQDN □□□□□□□□□□
    - □□□□□□□ FQDN □□□□□ DNS SRV □□
    - **SIP OPTIONS** □□□□□□□□□□□□□□□□□□□□□□□□□□□□
        - □□□□□ TCP□`SIP/2.0/TCP` □ 5060 □□□
        - □□ TCP □□□□□□□□ UDP□`SIP/2.0/UDP` □ 5060 □□□
        - □□□□□□□□□□□ `:up`□□□□□□ `:down`□□□□□/□□□
    - □□□IP□□□□□□□□□□□□□□□□□□□□□□□□□

3. □□□□□□□ 60 □□

    - □□□□□□□□□ FQDN
    - DNS □□□□□□□□□□□□□□□
    - □□□□□□□□□□□□□□
        - □□ TCP □□ SIP OPTIONS□□□□5 □□
        - □□ TCP □□□□□□□ UDP□□□□5 □□
        - □□□□□□□□□□□□
    - □□□□□□□□□□ DNS □□□□□□□□

□□□□□□

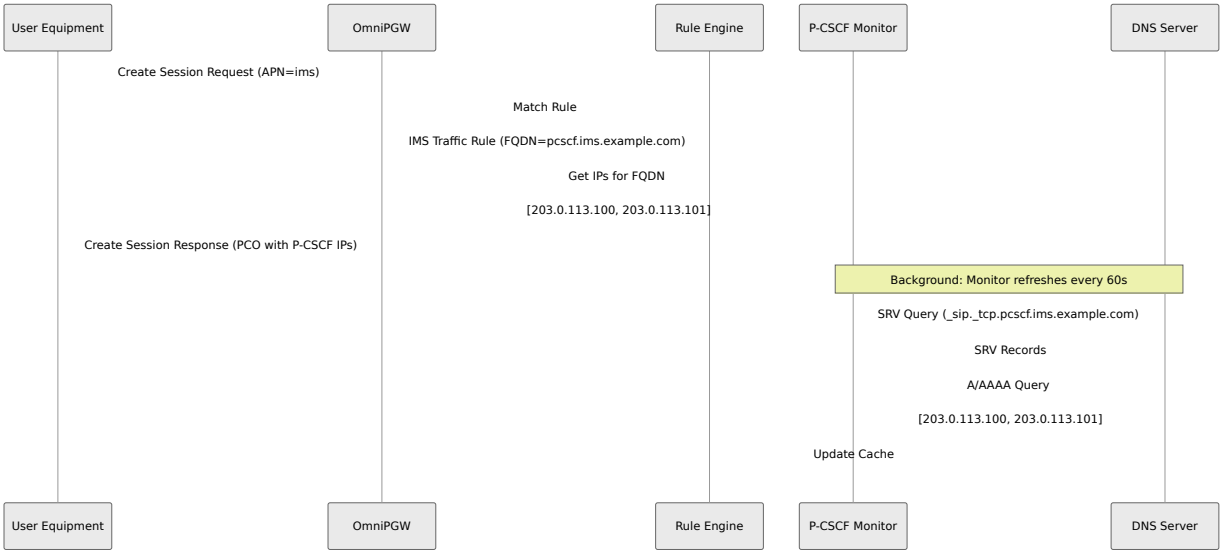

DNS □□□□

□□□□□□ **DNS SRV** □□ □□□□□ P-CSCF □□□

1. **SRV** □□□□□□ `_sip._tcp.{fqdn}` □ SRV □□
2. □□□□□□□□□□□□□□□□□□
3. □□□□□□□ SRV □□□□□□□□□□□
4. □□□□□□□□□□□□□□□□□□ IP □□□A/AAAA □□□
5. □□□□□□□□□ IP □□□□□□□□□

P-CSCF □□□□□□□

□□□□□□□□□□ **FQDN** □□□ **PCO** □□**FQDN** □□□

```
%{
  name: "IMS Traffic",
  p_cscf_discovery_fqdn: "pcscf.mnc001.mcc001.3gppnetwork.org",  #
← □□□□
  pco: %{
    p_cscf_ipv4_address_list: ["203.0.113.100", "203.0.113.101"]
# ← □□
  }
}
```

□□□□□

□□	**P-CSCF □□**	□□□ **IP**	□□□□
FQDN □□□□	DNS □ □□□□□	□ DNS □□□ IP	`"□□□□ FQDN pcscf.example.com □ P-CSCF □□"`
FQDN □□□□	□□ PCO □ □	□□ `pco.p_cscf_ipv4_address_list` □□□ IP	`"□□□ FQDN □□ P-CSCF IP□□□□□□□□"`
FQDN □□□□□	□□ PCO □ □	□□ `pco.p_cscf_ipv4_address_list` □□□ IP	□□□□
□□□□□	□□ PCO □ □	□□ `pco.p_cscf_ipv4_address_list` □□□ IP	□□□□□□
□□□ **FQDN**	□□ PCO □ □□□□	□□□□□□□□□□□□□ IP	□□□□□□□□

□□□□□

IMS □□□□□□□□□□□

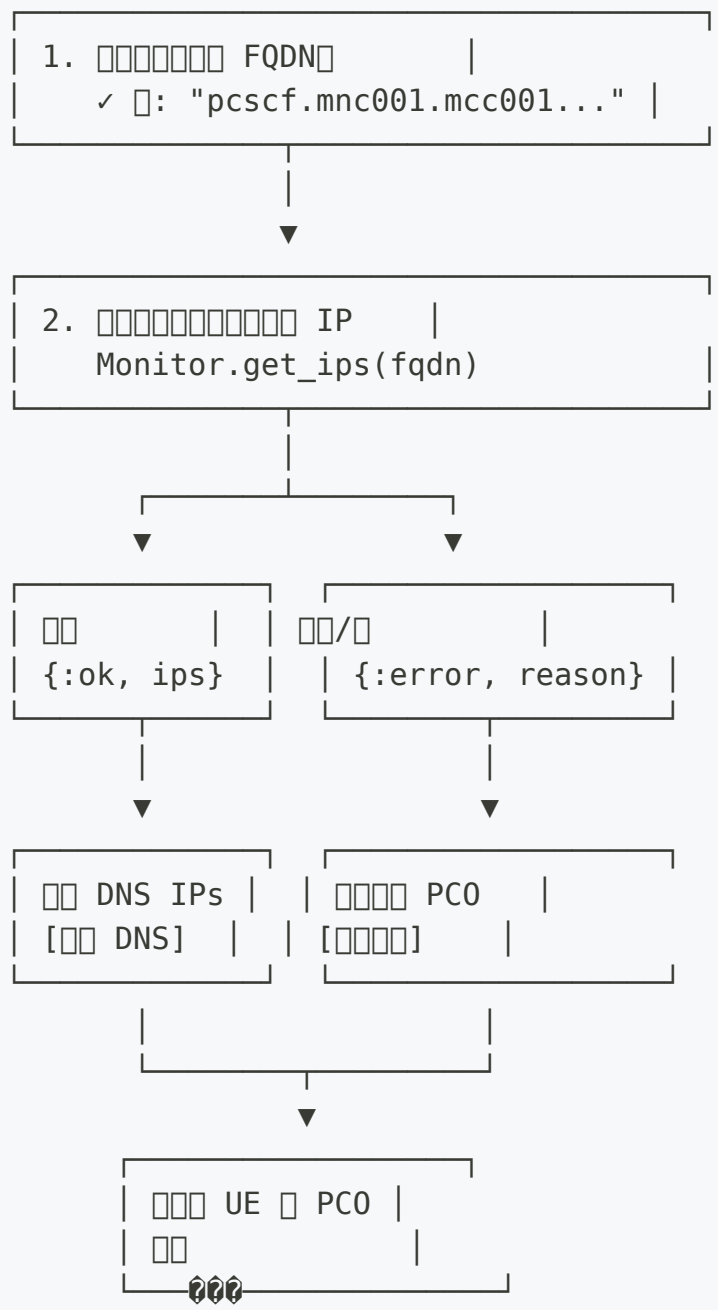
1. □□□□□□□ FQDN□
✓ □: "pcscf.mnc001.mcc001..."
2. □□□□□□□□□□□ IP
Monitor.get_ips(fqdn)
□□
{:ok, ips}
□□/□
{:error, reason}
□□ DNS IPs
[□□ DNS]
□□□□ PCO
[□□□□]
□□□ UE □ PCO
□□

□□□□□

□□ 1□DNS □□□□□□ □

```
□□□
  p_cscf_discovery_fqdn: "pcscf.ims.example.com"
  pco.p_cscf_ipv4_address_list: ["203.0.113.100"]

DNS □□□[203.0.113.150, 203.0.113.151]
UE □□□[203.0.113.150, 203.0.113.151] ← □□ DNS
□□□□ DNS □□□□□□□ PCO □□□
```

□□ 2□DNS □□□□□□□ ⚠

```
□□□
  p_cscf_discovery_fqdn: "pcscf.ims.example.com"
  pco.p_cscf_ipv4_address_list: ["203.0.113.100"]

DNS □□□□□ :no_naptr_records
UE □□□[203.0.113.100] ← □□□□ PCO
□□□□□ DNS □□□□□□□□□
```

□□ 3□□□□ FQDN

```
□□□
  # □□□ p_cscf_discovery_fqdn
  pco.p_cscf_ipv4_address_list: ["192.168.1.50"]

UE □□□[192.168.1.50] ← □□□□ PCO
□□□□□□ DNS □□
```

□□□□□□□□□□

1. □□□□□DNS □□□□□□□□□□□□□□□□□□□
2. □□□□□□□□□□□□□□□□□□□ DNS □□□□□
3. □□□□□□□□□□□□□□□□□□□□□□□
4. □□□□□□□□□□□□□□□

□□□□□□□□□□□□□ FQDN □□□ PCO□

```
# ✓ □□□□□□□□□□
%{
  p_cscf_discovery_fqdn: "pcscf.ims.example.com",  # □□
  pco: %{
    p_cscf_ipv4_address_list: ["203.0.113.100"]     # □□□
  }
}

# ⚠ □□□□□□□□□□□□□□□□ PCO□
%{
  p_cscf_discovery_fqdn: "pcscf.ims.example.com"
  # □□□□□□□□□□
}

# ✓ □□□□□□□□□□ DNS □□□
%{
  pco: %{
    p_cscf_ipv4_address_list: ["192.168.1.50"]
  }
}
```

OAM API □□

P-CSCF □□□□

□□□□ OAM REST API□HTTPS/TLS □□□ `8443` □□□□□□□□□□□□ `/api` □□□□□□□□□ P-CSCF □□□□□□□

```
GET /api/pcscf_monitor
```

```
curl -k https://localhost:8443/api/pcscf_monitor
```

□□□□□□□□□□□□□□□

- □□□□
  - □□□□ FQDN □□
  - □□□□□ FQDN □□
  - □□□□□□□□
  - □□□ P-CSCF IP □□
- □□ **FQDN** □□□□□
  - □□□□□ FQDN
  - □□□□□□□□ / □□ / □□□
  - □□□ IP □□
  - □□□ IP □□□□□□□□□□□□□□□□□□□□
  - □□□□□□□□
  - □□□□□□□□□□□□□□□□□□□□

```
□ IMS □□□□□□□ 20□
   □□□APN □□ ^ims
   □□UPF-IMS-Primary (10.100.2.21:8805)

   □ P-CSCF □□
      FQDN: pcscf.mnc001.mcc001.3gppnetwork.org
      □□: ✓ □□□□2 □ IP□
      □□□ IP: 203.0.113.100, 203.0.113.101

   ⚙ PCO □□
      □ DNS: 198.51.100.195
      P-CSCF□□□□□□□□203.0.113.100, 203.0.113.101
```

□□□□□□□

Prometheus □□

P-CSCF □□□□□□ Prometheus□□□□□ 42069□□□□□□

Gauge □□

```
# FQDN □□□□
pcscf_fqdns_total                       # □□□□ FQDN □□
pcscf_fqdns_resolved                    # □□□□□ FQDN□DNS □□□
pcscf_fqdns_failed                      # □□□ FQDN □□□DNS □□□

# □□□□□□□□□□□□□
pcscf_servers_total                     # □□ DNS SRV □□□□ P-CSCF □□
□
pcscf_servers_healthy                   # □□ SIP OPTIONS □□□□□□□□
pcscf_servers_unhealthy                 # □□□ SIP OPTIONS □□□□□□□□

# □□□□□□□□□ FQDN □□□□
pcscf_servers_healthy{fqdn="..."}       # □□ FQDN □□□□□□
pcscf_servers_unhealthy{fqdn="..."}     # □□ FQDN □□□□□□□
```

□□□□□□□□□

- `healthy`□□□□□□□□ SIP OPTIONS ping□TCP □ UDP□
- `unhealthy`□□□□□□□□□ SIP OPTIONS□□□□□ 5 □□□□

□□□□

DNS □□□□□

```
# □□□□□□□□ FQDN
pcscf_fqdns_resolved

# □□ DNS □□□
(pcscf_fqdns_resolved / pcscf_fqdns_total) * 100

# □□□□□□□□□
pcscf_servers_total
```

SIP OPTIONS □□□□□

```
# □□ FQDN □□□□□□□□□
pcscf_servers_healthy

# □□□□□□□□□
pcscf_servers_unhealthy

# □□□□□□□□□□
(pcscf_servers_healthy / pcscf_servers_total) * 100

# □□ FQDN □□□□□□
pcscf_servers_healthy{fqdn="pcscf.mnc001.mcc001.3gppnetwork.org"}

# □□□□□□□□□□□□
pcscf_servers_healthy == 0 AND pcscf_servers_total > 0
```

Prometheus □□□□□

```yaml
# □□□□ P-CSCF □□□□□□□□□□□□□□
- alert: AllPCSCFServersDown
  expr: pcscf_servers_healthy == 0 AND pcscf_servers_total > 0
  for: 5m
  labels:
    severity: critical
  annotations:
    summary: "□□ P-CSCF □□□□□□□□"
    description: "{{ $value }} □□□□□□□□0□ - □□ SIP OPTIONS □□□□□"

# □□□□ 50% □□□□□□□□□□□□□□
- alert: MajorityPCSCFServersDown
  expr: (pcscf_servers_healthy / pcscf_servers_total) < 0.5
  for: 5m
  labels:
    severity: warning
  annotations:
    summary: "□□□□ P-CSCF □□□□□□□□"
    description: "□□ {{ $value }}% □□□□□□□ SIP OPTIONS"

# □□ DNS □□□□□□□□
- alert: PCSCFDNSResolutionFailed
  expr: pcscf_fqdns_failed > 0
  for: 5m
  labels:
    severity: warning
  annotations:
    summary: "P-CSCF DNS □□□□"
    description: "{{ $value }} □ FQDN □□□□□□□"
```

□□□□

□□□□□□□□□□□

```
[info] P-CSCF Monitor started
[info] Registering 2 unique P-CSCF FQDNs for monitoring:
["pcscf.ims.example.com", "pcscf.enterprise.example.com"]
[info] P-CSCF Monitor: Registering FQDN pcscf.ims.example.com
[debug] P-CSCF Monitor: Successfully resolved
pcscf.ims.example.com to 2 IPs
[warning] P-CSCF Monitor: Failed to resolve
pcscf.enterprise.example.com: :nxdomain
[debug] Using P-CSCF addresses from FQDN pcscf.ims.example.com:
[{10, 101, 2, 100}, {10, 101, 2, 101}]
```

□□□□

□□□□□ □□□□□□ □□□□□□□□□

□ 1 □□DNS □□□□□□

```
p_cscf_discovery_fqdn: "pcscf.ims.example.com"
```

- □□□□□ DNS □□□□□□ IP
- □□□□□□□□□ IP
- □□□□□□□□□□□□□□□□

□ 2 □□□□□□□□ PCO□□□□

```
pco: %{
  p_cscf_ipv4_address_list: ["203.0.113.100", "203.0.113.101"]
}
```

- □□ DNS □□□□□□□□ IP□□□□
- □□□□□□□□□
- □□□□□□□□□□□□□

□ 3 □□□□ PCO □□□□□□□□

```
# □□ pco □□
pco: %{
  p_cscf_ipv4_address_list: ["203.0.113.146"]
}
```

- □□□□□□□□□□□□ DNS □□□□□□
- □□□□ P-CSCF □□
- □□□□□□□□□□□□□□□□

□□□□□□

```
□□□□ "IMS □□" □□□

1. □□ DNS □□ "pcscf.ims.example.com"
   ├─ □□ → □□ [203.0.113.100, 203.0.113.101] ✓
   └─ □□ → □□□□□

2. □□□□□ PCO □□
   ├─ □□ → □□ [203.0.113.100, 203.0.113.101] ✓
   └─ □□□ → □□□□□

3. □□□□ PCO □□
   └─ □□ [203.0.113.146] ✓□□□□□□
```

DNS □□

DNS □□□□□

□□ DNS □□□□□□ P-CSCF □□□ SRV □ A/AAAA □□□

```
; P-CSCF □ SRV □□□_sip._tcp □□□□□□□□□
_sip._tcp.pcscf.mnc001.mcc001.3gppnetwork.org. IN SRV 10 50 5060
pcscf1.example.com.
_sip._tcp.pcscf.mnc001.mcc001.3gppnetwork.org. IN SRV 20 50 5060
pcscf2.example.com.

; A □□
pcscf1.example.com. IN A 203.0.113.100
pcscf2.example.com. IN A 203.0.113.101
```

□□□OmniPGW □□□□□□□□ FQDN □□□ `_sip._tcp.`□□□□□□□ `p_cscf_discovery_fqdn: "pcscf.mnc001.mcc001.3gppnetwork.org"`□□□□□□□ `_sip._tcp.pcscf.mnc001.mcc001.3gppnetwork.org`□

SRV □□□□

SRV □□□□□□□□□□

```
_service._proto.domain. IN SRV priority weight port target.
```

- □□□□□□□□□□□□□□□□□□□□□10 □ 20 □□□
- □□□□□□□□□□□□□□□□□□□□□□□□□□ = □□□□□
- □□□SIP □□□□□ TCP □ 5060□UDP □ 5060□
- □□□□□□□□ IP □□□□□□□

□□ DNS □□

```
# □□ SRV □□□□□□ _sip._tcp □□□
dig SRV _sip._tcp.pcscf.mnc001.mcc001.3gppnetwork.org @192.0.2.177

# □□□□□□
# _sip._tcp.pcscf.mnc001.mcc001.3gppnetwork.org. 300 IN SRV 10 50
5060 pcscf1.example.com.

# □ P-CSCF □□□□□□□ IP
dig A pcscf1.example.com @192.0.2.177

# □□□□□□
# pcscf1.example.com. 300 IN A 203.0.113.100
```

□□□□

□□□FQDN □□“□□”□□

□□□

- `GET /api/pcscf_monitor` □□□□□□□
- □□□`:nxdomain`□`:timeout` □ `:no_naptr_records`

□□□□□□

1. DNS □□□□□□□
2. FQDN □ DNS □□□□
3. □□□ NAPTR □□
4. DNS □□□□□□

□□□□□□

```
# 1. □□ DNS □□□□□□
ping 192.0.2.177

# 2. □□□□□ NAPTR □□
dig NAPTR pcscf.mnc001.mcc001.3gppnetwork.org @192.0.2.177

# 3. □□ OmniPGW □□
grep "P-CSCF" /var/log/pgw_c.log

# 4. □□□□□
grep "p_cscf_discovery_dns_server" config/runtime.exs

# 5. □□□□□ OAM API □□□□□□□□□
curl -k https://localhost:8443/api/pcscf_monitor
```

□□□□□□□ IP

□□□

- `GET /api/pcscf_monitor` □□“0 IP”
- □□□□□□□□□□□□□□

□□□□□□

1. NAPTR □□□□□□□□□□ FQDN □□□□□
2. □□□□□□ IMS/SIP □□□□□□
3. □□ A/AAAA □□

□□□□□□

```
# □□ NAPTR □□□□□□□□
dig NAPTR pcscf.example.com @192.0.2.177

# □□□□□□□□ "SIP" □ "IMS":
# □□□□ "SIP+D2U", "x-3gpp-ims:sip"
# □□□□ "HTTP", "FTP"

# □□ A/AAAA □□□□□□□□
dig pcscf1.example.com A @192.0.2.177
```

□□□□□□□□□□ P-CSCF

□□□

- UE □□□□□ P-CSCF □□
- □□□□□□□□□□□□□ IP

□□□□□

1. DNS □□□□□□□□□□
2. □□□□□□□
3. FQDN □□□

□□□□□

```
# 1. □□ P-CSCF □□□□
# □□ FQDN □□□□□□□□

# 2. □□□□□□
grep "Using P-CSCF addresses from FQDN" /var/log/pgw_c.log

# 3. □□ UPF □□□□
# □□□□□□□□□□□ FQDN □□□

# 4. □□□□□□
# □□□□ APN □□□□□□□□□□□
```

□□□□ DNS □□□□

□□□

- □□□□□□
- □□□□□ `pcscf_discovery_query_duration_seconds`

□□□□□

1. DNS □□□□□□□
2. □ DNS □□□□□□□
3. □□□□□□

□□□□□

```
# □□□□□□□
pco: %{
  p_cscf_discovery_timeout_ms: 2000  # □ 5000ms □□
}

# □□□□□□□□□ DNS □□□
pco: %{
  p_cscf_discovery_dns_server: "10.0.0.10"  # □□ DNS
}
```

□□□□

1. DNS □□□□□

□□□□ **DNS** □□□

```
pco: %{
  # □□□ P-CSCF □□□□□ DNS□□ UE DNS □□□
  p_cscf_discovery_dns_server: "192.0.2.177",

  # UE DNS □□□□□□□□□□□□□
  primary_dns_server_address: "8.8.8.8",
  secondary_dns_server_address: "8.8.4.4"
}
```

□□□□

- □□□□□□UE DNS □□□ IMS DNS
- □□□□□□□□□□□□
- □□□□□□□□□□

2. □□□□□□□□□

```
%{
  p_cscf_discovery_fqdn: "pcscf.ims.example.com",  # □□
  pco: %{
    p_cscf_ipv4_address_list: ["203.0.113.100"]  # □□□□□
  }
}
```

□□□□

- □□□□□□□ DNS □□□□□□□□
- □□□□
- □□ SLA □□

3. □□□□□□□□□□□□□□□ FQDN

```
rules: [
  # IMS
  %{
    name: "IMS",
    match_regex: "^ims",
    p_cscf_discovery_fqdn:
"pcscf.ims.mnc001.mcc001.3gppnetwork.org"
  },

  # □□
  %{
    name: "Enterprise",
    match_regex: "^enterprise",
    p_cscf_discovery_fqdn: "pcscf.enterprise.example.com"
  }
]
```

□□□□

- □□□□□□□□□□ P-CSCF □
- □□□□□□□□

- □□□□□□□

4. □□ DNS □□□□

```
# □ P-CSCF □□□□□□□□□□□□
alert: HighPCSCFQueryLatency
expr: histogram_quantile(0.95,
pcscf_discovery_query_duration_seconds_bucket) > 2
for: 5m
labels:
  severity: warning
annotations:
  summary: "P-CSCF DNS □□□□□p95 > 2s□"
```

5. □□□□ DNS □□□□

- **OAM API**□□□□□ `GET /api/pcscf_monitor`
- □□□□□ `pcscf_monitor_fqdns_failed` □□
- □□□□□ DNS □□
- □□□□□□□ DNS □□□□□□

6. □□□□□□□

```
# □□□□□□□□□□□□
pco: %{
  p_cscf_discovery_timeout_ms: 5000  # 5 □
}

# □□□□□□□□□□□□□□□□
pco: %{
  p_cscf_discovery_timeout_ms: 2000  # 2 □
}
```

7. □□ DNS □��

□□□ DNS □□□ DNS□

```
# □ P-CSCF DNS
pcscf.mnc001.mcc001.3gppnetwork.org. IN NAPTR 10 50 "s" "SIP+D2U"
"" _sip._udp.pcscf1.example.com.

# □□ P-CSCF DNS
pcscf.mnc001.mcc001.3gppnetwork.org. IN NAPTR 20 50 "s" "SIP+D2U"
"" _sip._udp.pcscf2.example.com.
```

□□□□

- **PCO □□** - □□□□□□□□DNS □ P-CSCF □□
- □□□□ - □□□ OmniPGW □□□□
- □□ - □□□□□□□□□□□□□
- □□□□ - □□□□□□□□ PCO □□
- **PFCP □□** - □□□□□□□□□

□□□□□

OmniPGW P-CSCF □□ - *□ Omnitouch □□□□□□*

PFCP/Sxb □□□□

□□□□□□□□□□ - PGW-C □ PGW-U □□□

□□

1. □□
2. □□□□
3. PFCP □□□□
4. PFCP □□□□
5. □□□□□□□□
6. □□
7. □□ DNS □ UPF □□
8. □□□
9. □□□□
10. PFCP □□
11. □□□□

□□

Sxb □□ □□ PFCP□□□□□□□□□□□□□ □□ PGW-C□□□□□□□ PGW-U□□□□□□□□□□□□□□□□□□□□□□□□

- □□□□□**PGW-C**□ - □□□□□□□□□□□□□□□□
- □□□□□**PGW-U**□ - □□□□□□□□□□□□□□□

PFCP □□

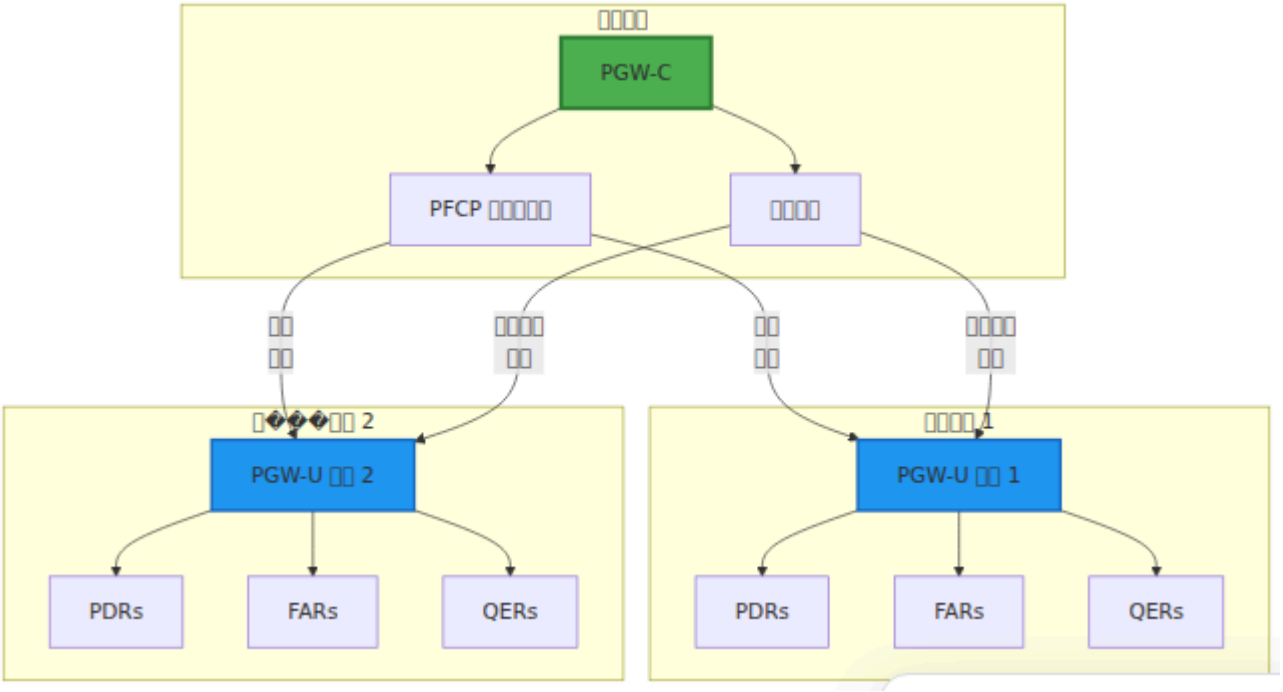

□□□□

PFCP □□

PGW-C □□ **PFCP** □□ **1**□3GPP TS 29.244□□

□□

- □□□ UDP
- □□□□□ 8805
- □□□□□ □□ PFCP □□□□□□□□□

□□ ID □□

PFCP □□□□□□□ ID □□□□□□□□□

- **IPv4** □□ - □□□
- **IPv6** □□

- **FQDN**□□□□□□□□□

PFCP □□□□

□□□□□□□□□□□□□□□ PGW-C □ PGW-U □□□□ PFCP □□□

[redacted]

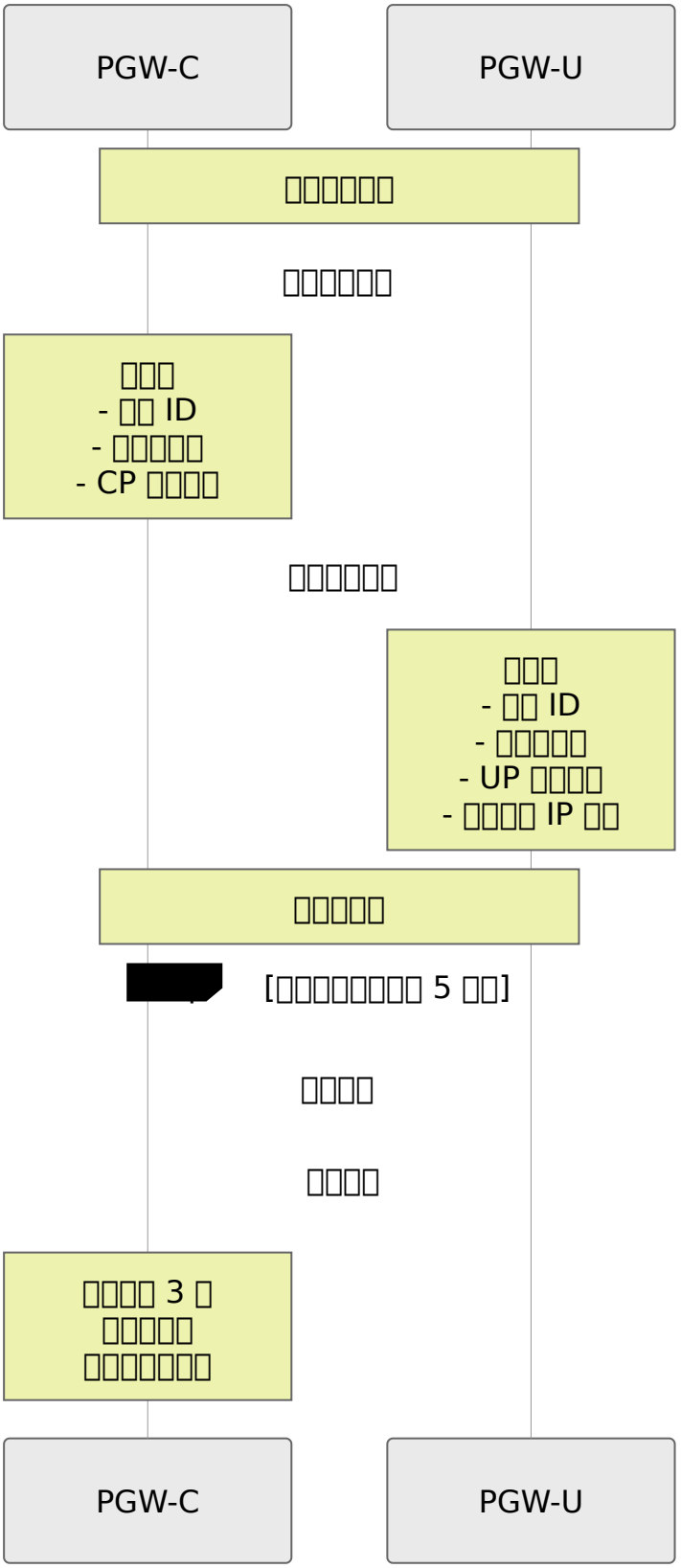
PGW-C
PGW-U
[redacted]
[redacted]
[redacted]
- [redacted] ID
- [redacted]
- CP [redacted]
[redacted]
[redacted]
- [redacted] ID
- [redacted]
- UP [redacted]
- [redacted] IP [redacted]
[redacted]
[redacted]
[redacted] 5 [redacted]
[redacted]
[redacted]
[redacted] 3 [redacted]
[redacted]
[redacted]
PGW-C
PGW-U

□□□□□□

□□ PFCP □□□□□□□□

□□	□□
`is_associated`	□□□□□□□□□□□
`remote_node_id`	□□□□□□ ID□IP □ FQDN□
`remote_ip_address`	□□□□□ IP □□
`remote_port`	UDP □□□□□ 8805□
`heartbeat_period_ms`	□□□□□□□□
`missed_heartbeats_consecutive`	□□□□□□□
`up_function_features`	□□□□□□□□□
`up_recovery_time_stamp`	□□□□□□□□□

□□□□

□□□ □□□□□□□□□□□□□□□□

□□□

```
# □ config/runtime.exs □
sxb: %{
  local_ip_address: "10.0.0.20"
},
upf_selection: %{
  fallback_pool: [
    %{remote_ip_address: "10.0.0.21", remote_port: 8805, weight:
100}
  ]
}
# □□ UPF □□□□□□□□□□□ 5 □
```

□□□□□

- □□□□□□□□□□ `missed_heartbeats_consecutive`
- □□□□□□□□ 3 □□□□□□
- □□□□□□□□□□□□□□□□□□

PFCP □□□□

PFCP □□□□□ UE PDN □□□□□□□□□□□□□□□□□□□□

□□□□□□□

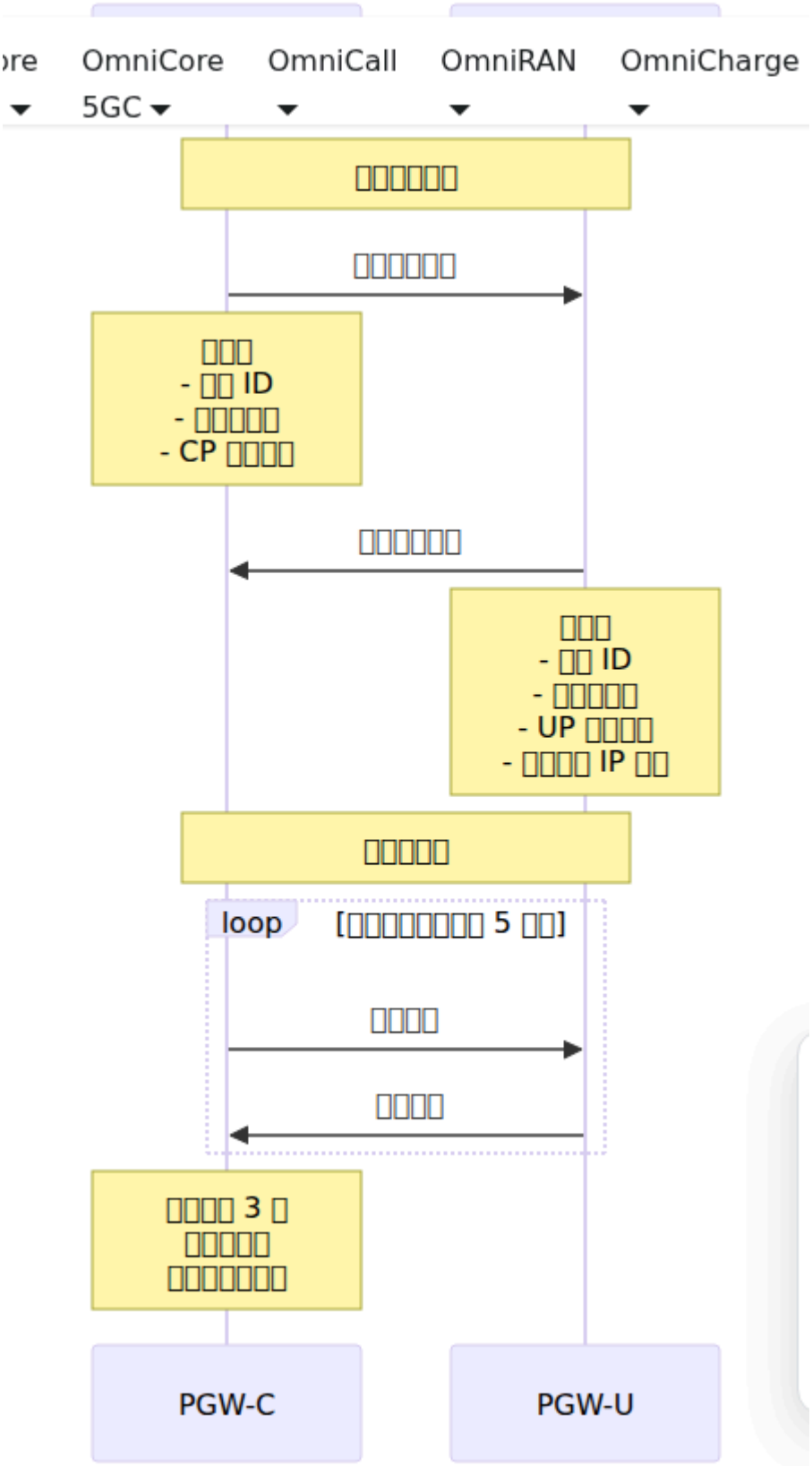
OmniCore
5GC
OmniCall
OmniRAN
OmniCharge
□□□□□□□
□□□□□□□
□□□
- □□ ID
- □□□□□
- CP □□□□
□□□□□□□
□□□
- □□ ID
- □□□□□
- UP □□□□
- □□□□ IP □□
□□□□□
loop
[□□□□□□□□ 5 □□]
□□□□
□□□□
□□□□ 3 □
□□□□□
□□□□□□□
PGW-C
PGW-U

□□□□

□□□ UE □□□□□□ PDN □□

PGW-C □□□ PGW-U□

□□□□□□□ □□□

- **SEID**□□□□□□ ID□ - □□□□□□□□
- □□ **ID** - PGW-C □□□ ID
- **F-SEID** - □□□□□ SEID□□□ IP + SEID□
- **PDRs** - □□□□□□□□□□ 2 □□□□ + □□□
- **FARs** - □□□□□□□□□□ 2 □□□□ + □□□
- **QERs** - QoS □□□□□□□□□□□□
- **BAR** - □□□□□□□□□□□□□□□□

PGW-U □□□

□□□□□□□ □□□

- □□ - □□□□□□□□
- **F-SEID** - PGW-U □□□□□
- □□□ **PDRs** - □□□□□□□□
- **F-TEID** - S5/S8 □□□□□□□□ TEID

□□□□

□□□ QoS □□□□□□□□□□□□□□□□□

□□□□□□□□

- □□□□ PDRs□FARs□QERs
- □□□□□□
- □□□□□□

□□□□

□□□ UE □□□ PDN □□□□□

□□□

1. PGW-C □□□□□□□□□□□ SEID
2. PGW-U □□□□□□□□□□□
3. PGW-U □□□□□□□□

F-TEID □□

F-TEID□□□□□□□□□□□□□ □□ GTP-U □□□□□□□□□□□□□□□□□ PFCP □□□□□□□□ F-TEID□□□□ UPF □□□□□□□□□□□□□□□□□□□□□□□□

□□ **F-TEID** □□

□□□□□□ F-TEID □□□□□□

- **TEID**□□□□□□□□□ - 32 □□□□□□□□
- **IP** □□ - □□ GTP-U □□□□□□□UPF □ IP □□□

□□□ □□□ TEID □□

□□ **1□UPF** □□□□□□□□

- PGW-C □“□□□□□□□ TEID”□CHOOSE □□□
- UPF □□□□□□□□□□ TEID□□□□□□

□□ **2□PGW-C** □□□□□□□□

- PGW-C □□□□ TEID□□□□ UPF“□□□□□□□ TEID”
- UPF □□□□□ TEID□□□□□□

UPF □□□□□ **-** □□□

□□□

```
sxb: %{
  allocate_uplink_f_teid: false  # □□
}
```

□□□□□

1. PGW-C □□□□ F-TEID CHOOSE □□□ PFCP □□□□□□
2. UPF □□□□□□□□□□□□□□ TEID
3. UPF □□□□□ F-TEID□TEID + IP □□□
4. PGW-C □□□□□□□□□□□□□□ F-TEID

□□□□□□□□□

□ □□□□□

- UPF □□□□□□ = UPF □□□□□□□□□
- PGW-C □□□□ UPF □□□ TEID
- □□□□□□□□□□□□

□ □ **PGW-C** □□□□

- □□ PGW-C □□□□□□□ UPF □□□□□□□□
- □□ PGW-C □□□□□□ TEID □□□□□
- UPF □□□□□□□□□□□□□□□□□□

□ □□ **3GPP** □□

- CHOOSE □□□ 3GPP TS 29.244 □□□
- □□ UPF □□□□□□□
- □□“□□□□□□”□□□

□ □□□□□□□□

- □□ PGW-C □□□UPF □□□□ TEID □□□□
- □□□□ TEID □□□□
- UPF □□□□□□□□□ TEID

□□□□□

- □ □□ UPF □□□□□□□□□□
- □ □□ UPF □□□ PGW-C □□
- □ □□□□□□□□□□□□□□□
- □ □□□□□□□ 3GPP PFCP □□

□□□□□

- ⚠ □□□□□□□□□ UPF □□□□□ CHOOSE □□
- ⚠ □□□□□□□□□□□□□“□□□□ IE”□□□□□□□UPF □□□□□ CHOOSE

PGW-C □□□□□□□□□

□□□

```
sxb: %{
  allocate_uplink_f_teid: true
}
```

□□□□□

1. PGW-C □□□□□□□□□□□□□□□ TEID
2. PGW-C □□□□□□ TEID □□ PFCP □□□□□□
3. UPF □□□□□□□□□□ TEID□□□□□□
4. PGW-C □ UPF □□□□□□ TEID □

□□□□□□□□□□

□ UPF □□□ CHOOSE

- □□ UPF □□□□□□□□□/□□□□□□□□□□
- UPF □□□ PFCP □□□□□□□□□□□ TEID
- □□□□□□□□□□

□ □□ TEID □□

- □□□□□ PGW-C □□□□□□□□□ TEID
- □□□□□□□□□□□□□PGW-C □□□□□ TEID □□
- □□□□□□□□□□ TEID □□□□□□□□

□ □□□□□

- □□□□□□□□□ TEID □□□□
- □□□□□□□□□□□□□□ TEID □□

□□□

⚠ □ **PGW-C** □□□□

- □□ UPF □□□ PGW-C □□□□□□ TEID □□
- □□□
  - □□ PGW-C □□□ TEID □□□□□□□□
  - □□ TEID □□□□□□□□□□□□
  - □□□□□□□□□□□□□□□□□

⚠ □□□□

- PGW-C □□□□□□□ TEID □□□□□
- PGW-C □□□ TEID □□□□□□□□□□□□□□□
- □□□□□□□□□□

⚠ □□□□□

- □□□□□ PFCP □□□□
- □□□□□□□ CHOOSE □ UPF □□□□□

□□□□□

- ⚠ □□ **UPF** □□□ **CHOOSE** □□□
- ⚠ □□ UPF □□□□□□□□□□□□□
- ⚠ □□□□□□□□
- ⚠ □□ PGW-C TEID □□□□□□□□

TEID □□□□□ PGW-C □□□□□□□□□□□□

- TEID □□□1 □ 0xFFFFFFFF□42 □□□□
- □□□□□□ 100 □□□□□□□ 0.023%
- □□□□□□□□□□□□□□□□

- □□□□□□□□□□ TEID

□□□□

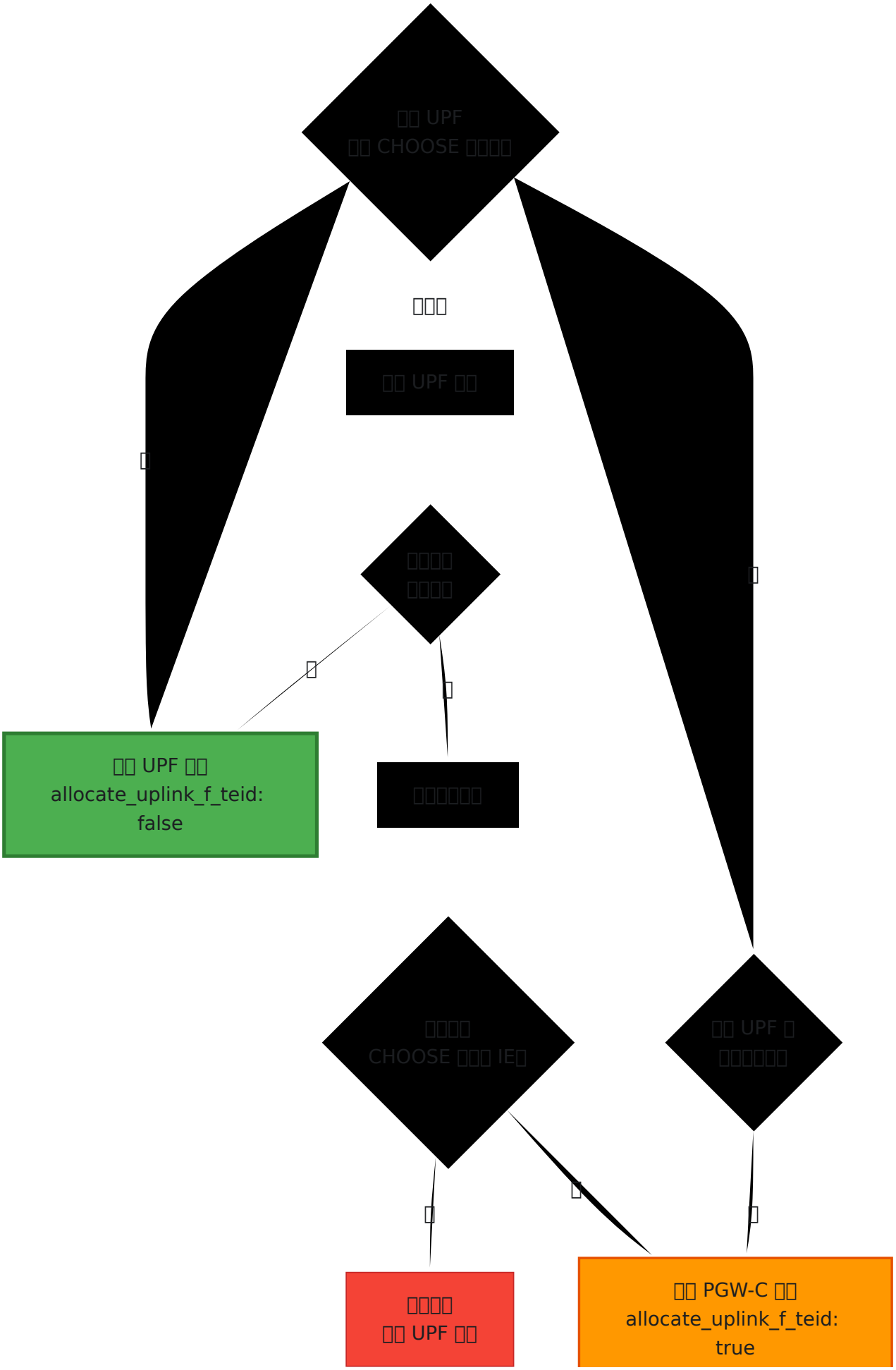
□□ UPF
□□ CHOOSE □□□□
□□□
□□ UPF □□
□
□□□□
□□□□
□
□
□□ UPF □□
allocate_uplink_f_teid:
false
□□□□□□□
□□□□
CHOOSE □□□ IE□
□□ UPF □
□□□□□□□
□
□
□
□□□□
□□ UPF □□
□□ PGW-C □□
allocate_uplink_f_teid:
true

□□□□

□□□□□□□□□□□□

□□ PFCP □□□

```
# □□□ CHOOSE □□□□□
grep -i "choose\|mandatory.*missing" /var/log/pgw_c.log

# □□ PFCP □□□□□□□□□□
grep "Session Establishment Response" /var/log/pgw_c.log
```

□□ UPF □□ CHOOSE □□□

- □□□□□□“□□□□ IE”□“□□ IE”
- UPF □□□□ F-TEID□□□□ CHOOSE
- □□□□□ □□ `allocate_uplink_f_teid: true`

□□ PGW-C □□□□□□□

- □□□□ - TEID □□□□□40 □□□□
- □□ TEID □□□□□□□□□□□□□□□□□□

```
# □□□□□□
grep "registered_teid_count" /var/log/pgw_c.log
```

□□□□□□□□

```
# □□ config/runtime.exs
sxb: %{
  local_ip_address: "10.0.0.20",
  allocate_uplink_f_teid: false  # □□ UPF □□□ CHOOSE□□□□□ true
}
```

□□□□ PGW-C□

```
systemctl restart pgw_c
```

□□□□□□□□□□□□□□□ □□ PFCP □□□□□□□

```
# □□ PFCP □□
tcpdump -i any -n port 8805 -w pfcp.pcap

# □ Wireshark □□□□□□□□□□□□□□
# □□ F-TEID □□“CHOOSE”□□□UPF □□□□
# □□ F-TEID □□□□ TEID □□PGW-C □□□□
```

□□□□□□□

PFCP □□□□□□□□□□□□□□□□□□□□□□□□□□□□

□□□□

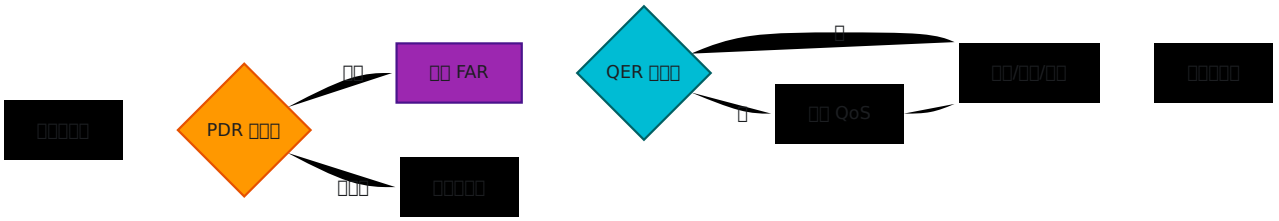

PDR□□□□□□□□□

□□□ □□□□□□□□□□□□□□□

□□ **PGW-C** □□□

PDR #1 - □□□

```
PDR ID: 1
□□□: 100
PDI□□□□□□□□□□□□□
  - □□□□□CORE□□□□□□□
  - UE IP □□□100.64.1.42/32
FAR ID: 1□□□□□□□□□□
```

PDR #2 - □□□

```
PDR ID: 2
□□□: 100
PDI□□□□□□□□□□□□□
  - □□□□□ACCESS□SGW □□
  - F-TEID: <S5/S8 □□□□>
FAR ID: 2□□□□□□□□□□
QER ID: 1□QoS □□□
```

□□ PDR □□□

- **PDR ID** - □□□□□□□□□□□□□□□□
- □□□ - □□□□□□□□□□□□□□□□
- **PDI** - □□□□□□□□□IP□TEID □□
- □□□□□ - □□□□□□□ GTP-U □
- **FAR ID** - □□□□□□□□
- **QER ID** - □□□ QoS □□□□□□

FAR□□□□□□□□

□□□ □□□□□□□□□□□□□□□□

FAR #1 - □□□□□□□ → UE□□

```
FAR ID: 1
□□□□□□□□
□□□□□□
  - □□□□□□ACCESS□□ SGW□
  - □□□□□□□GTP-U/UDP/IPv4
  - □□ F-TEID: <SGW S5/S8 □□□□>
```

FAR #2 - □□□UE → □□□□□

```
FAR ID: 2
□□□□□□□□
□□□□□□
  - □□□□□□CORE□□□□□□□
  - □□□□□□ - □ IP □□□
```

□□ FAR □□□

- **FAR ID** - □□□□□□□□
- □□□□ - □□□□□□□□□□□□
- □□□□
  - □□□□□□ACCESS/CORE□
  - □□□□□□□□□ GTP-U □□□
  - □□□□□□VRF/□□□□

QER□QoS □□□□□

□□□ □□□□□□□□□ QoS □□□QER □□□□□□□□□□□□

```
QER ID: 1
□□□□□□□
□□□□□□□
  - □□□100 Mbps
  - □□□50 Mbps
□□□□□□□□□□□□□□□□ GBR □□□
  - □□□10 Mbps
  - □□□10 Mbps
```

□□ **QER** □□□

- **QER ID** - □□□□□□□□
- □□□ - □□□□□□□□□□□□□□□
- **MBR** - □□□□□□□□□/□□□
- **GBR** - □□□□□□□□□□□□□□□□
- **QCI** - QoS □□□□□□□□□□□

BAR□□□□□□□□

□□□ □□ UE □□□□□□□□□□□□

□□ **BAR**□

```
BAR ID: 1
□□□□□□□□□□100ms
□□□□□□□□□□□10
```

□□□ □□□□ DRX□□□□□□□□□

□□

□□ Sxb □□

□□ `config/runtime.exs`□

```
config :pgw_c,
  sxb: %{
    # PFCP □□□□□ IP □□
    local_ip_address: "10.0.0.20",

    # □□□□□□□□□□□8805□
    local_port: 8805,

    # PFCP □□□□□□□□□□□□□500ms□
    # □□ UPF □□□□□□□□□□□□□
    # □□□□□□□□□□□ UPF □□□□□□□□□□□□□
    request_timeout_ms: 500,

    # PFCP □□□□□□□□□□□□□3□
    # □□□□□□□□ = request_timeout_ms * request_attempts
    request_attempts: 3,

    # □□□□□□□□□□□ F-TEID □□
    # □□ false□□□□□UPF □□ F-TEID□CHOOSE □□□
    # □□ true□PGW-C □□□ F-TEID □□□□□□
    # □□□□□ UPF □□□□□ CHOOSE □□□□□□□□□
    allocate_uplink_f_teid: false
  },

  # UPF □□ - □□□□□□□ UPF □□□□
  upf_selection: %{
    fallback_pool: [
      %{
        # PGW-U IP □□
        remote_ip_address: "10.0.0.21",

        # PFCP □□□□□□8805□
        remote_port: 8805,

        # □□□□□□□100 = □□□0 = □□□
        weight: 100
      }
    ]
  }
```

□□□□□□

PFCP □□□□□□□□□□□□□□□ UPF □□□□□□□□□□□□□□□

□□□

□□	□□	□□□	□□
`request_timeout_ms`	□□	500	□□ UPF □□□□□□□□□□□□□□□□□□
`request_attempts`	□□	3	□□□□□□□□□□□□□□□□

□□□□□□ `request_timeout_ms × request_attempts`

□□□□□ 500ms × 3 □□□ = □□□□□ **1.5** □

□□□□□□□□□□

□□ `request_timeout_ms` □□□ UPF □□□□□□□□□□

1. PGW-C □□□□□□□□
2. □□□ UPF □□□□□□
3. PGW-C □□□□□□□□□□□
4. UPF □□□□□□□□□ □□ **PFCP** □□
5. PGW-C □□□□□□□□□□□□□□ ID
6. □□□□□□ UPF □□□ □□□

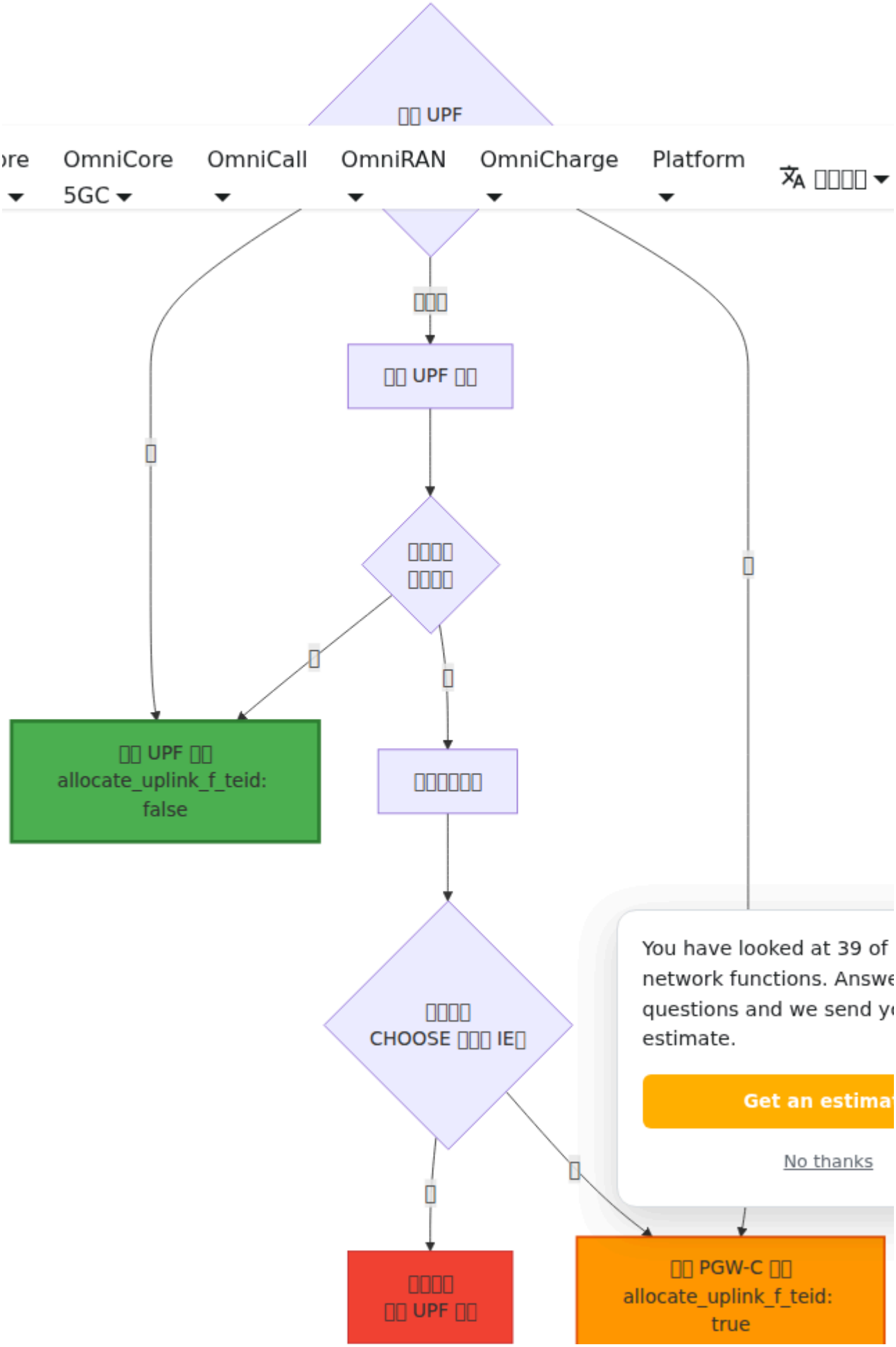
□□ UPF
ore
OmniCore 5GC
OmniCall
OmniRAN
OmniCharge
Platform
□□□□
□□□
□□ UPF □□
□□□□ □□□□
□
□
□
□□ UPF □□ allocate_uplink_f_teid: false
□□□□□□
□□□□ CHOOSE □□□ IE□
□
□
□□□□ □□ UPF □□
□□ PGW-C □□ allocate_uplink_f_teid: true
You have looked at 39 of
network functions. Answe
questions and we send y
estimate.
Get an estima
No thanks

□□□□

UPF □□□□	□□□ `request_timeout_ms`	□□□□□
□□□<100ms□	200-300ms	600-900ms□3 □□□□
□□□100-300ms□	500ms□□□□	1.5s□3 □□□□
□□300-500ms□	750-1000ms	2.25-3s□3 □□□□
□□□□>500ms□	1500-2000ms	4.5-6s□3 □□□□

□□□ □ `request_timeout_ms` □□□□□ **2×** □□□ **UPF** □□□□□□□□□□□□□□□□□□□□□□□□□□□□

□□ - □ UPF

```
sxb: %{
  local_ip_address: "10.0.0.20",
  request_timeout_ms: 1000,  # □□□□ 1 □
  request_attempts: 3         # □□□□□ 3 □
}
```

□□□□□□

□□□□□□□□□□□

- UPF □□□ PFCP □□□□□□□□
- □□□□□ UPF □□□□□□
- □□□□□“□□□□□□□□”□□□□□□□□

□□□□□

1. □□ UPF API □□□□□□□ UPF □□□□
2. □ PGW-C □□□□□□□□□□
3. □□ UPF □□□□□□□□□□□□□□□□□□□□□□□□

□□□□□

1. □□ `request_timeout_ms` □□□ UPF □□□□
2. □□ PGW-C □□□□□□
3. □ UPF □□□□□□□□□□□□□□ UPF □□□

□□ PGW-U □□□

□□□□□□□□□□

```
config :pgw_c,
  sxb: %{
    local_ip_address: "10.0.0.20"
  },
  upf_selection: %{
    fallback_pool: [
      %{remote_ip_address: "10.0.1.21", remote_port: 8805, weight:
50},  # 50% □□
      %{remote_ip_address: "10.0.2.21", remote_port: 8805, weight:
50}   # 50% □□
    ]
  }
# □□ UPF □□□□□□□□□□ 5 □
```

UPF □□□□

PGW-C □□ □□ **UPF** □□□□□□□□□□□□□□□□□□

1. □□□□□□□□□□□□ - □□□□□□□□□□□
2. □□ **DNS** □□□□□□□□□□□ - □□ DNS NAPTR □□□□□□□□□□□
3. □□□□□□□□□□□ - □□□□□□□□□□□□ UPF □

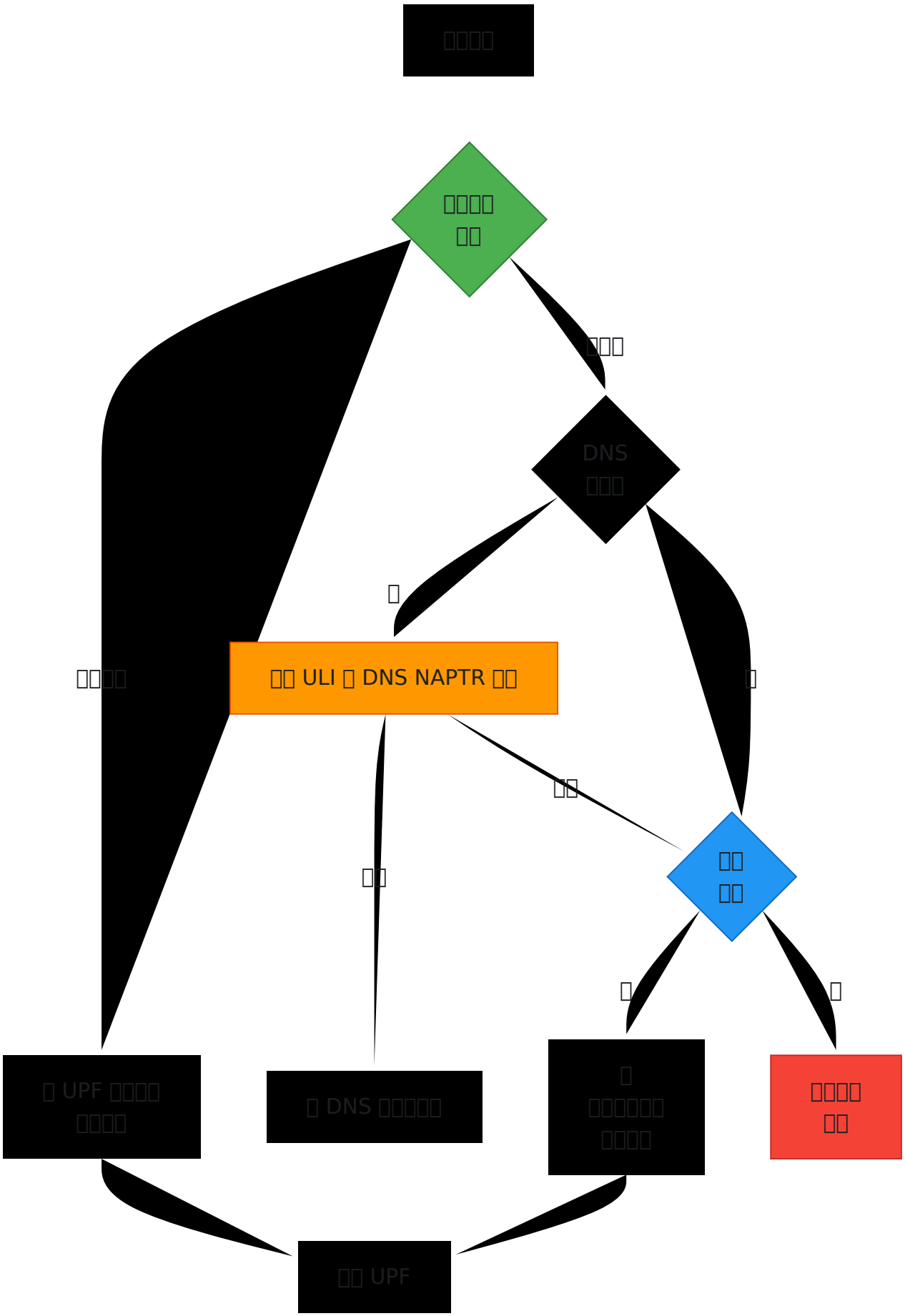
DNS
否
是
是
否
是
否

□□□□

□□□ **UPF** □□□□

```
config :pgw_c,
  # PFCP □□
  sxb: %{
    local_ip_address: "10.0.0.20"
  },

  # UPF □□□□□□□□□□□ UPF □□□□
  upf_selection: %{
    #
═══════════════════════════════════════════════════════════════════
    # □□ DNS □□□□□□□□□□□□
    #
═══════════════════════════════════════════════════════════════════
    # □□□□□□□□□□ULI□□□ DNS
    # □□□□□□□□□□□□ UPF □□
    dns_enabled: false,
    dns_query_priority: [:ecgi, :tai, :rai, :sai, :cgi],
    dns_suffix: "epc.3gppnetwork.org",
    dns_timeout_ms: 5000,

    #
═══════════════════════════════════════════════════════════════════
    # □□□□□□□□□□□□□□□
    #
═══════════════════════════════════════════════════════════════════
    # □□□□□□□□□□□□□
    # □□□□□□□□□□ UPF □
    rules: [
      # □□ 1□IMS ■■■□ - □□□□□
      %{
        name: "IMS □□",
        priority: 20,
        match_field: :apn,
        match_regex: "^ims",
        upf_pool: [
          %{remote_ip_address: "10.100.2.21", remote_port: 8805,
weight: 80},
          %{remote_ip_address: "10.100.2.22", remote_port: 8805,
weight: 20}
        ],
        # □□□□□□□ PCO □□
        pco: %{
          p_cscf_ipv4_address_list: ["203.0.113.100",
```

```
"203.0.113.101"]
        }
      },

      # □□ 2□□□ APN - □□□□
      %{
        name: "□□□□",
        priority: 15,
        match_field: :apn,
        match_regex: "^(enterprise|corporate)\.apn",
        upf_pool: [
          %{remote_ip_address: "10.100.3.21", remote_port: 8805,
weight: 100}
        ],
        pco: %{
          primary_dns_server_address: "192.168.1.10",
          secondary_dns_server_address: "192.168.1.11",
          ipv4_link_mtu_size: 1500
        }
      },

      # □□ 3□□□□□ - □□□□□
      %{
        name: "□□□□",
        priority: 10,
        match_field: :serving_network_plmn_id,
        match_regex: "^(310|311|312|313)",  # □□□□
        upf_pool: [
          %{remote_ip_address: "10.100.4.21", remote_port: 8805,
weight: 100}
        ]
      },

      # □□ 4□□□□□□ - □□□□□
      %{
        name: "□□□□□",
        priority: 5,
        match_field: :apn,
        match_regex: "^internet",
        upf_pool: [
          %{remote_ip_address: "10.100.1.21", remote_port: 8805,
weight: 33},
          %{remote_ip_address: "10.100.1.22", remote_port: 8805,
weight: 33},
```

```
          %{remote_ip_address: "10.100.1.23", remote_port: 8805,
weight: 34}
        ]
      }
    ],

    #
================================================================================
    # □□□□□□□□□□□□
    #
================================================================================
    # □□□□□□□□□ DNS □□□□□□□□□□□□
    fallback_pool: [
      %{remote_ip_address: "127.0.0.21", remote_port: 8805, weight:
100}
    ]
  }
```

□□□□□□□□

□□□□	□□	□□□
`:imsi`	□□□□□□□□	`"310260123456789"`
`:apn`	□□□□□	`"internet"` □ `"ims"`
`:serving_network_plmn_id`	□□□□ PLMN □MCC+MNC□	`"310260"` □□□□□□
`:sgw_ip_address`	SGW IP □□□□□□□□□	`"10.0.1.50"`
`:uli_tai_plmn_id`	□□□ PLMN ID	`"310260"`
`:uli_ecgi_plmn_id`	E-UTRAN □□ PLMN ID	`"310260"`

UPF □□□□□□

□□□□□□□□□□ **UPF** □□□□□□□□□□□□

```
upf_pool: [
  %{remote_ip_address: "10.100.1.21", remote_port: 8805, weight:
50},
  %{remote_ip_address: "10.100.1.22", remote_port: 8805, weight:
30},
  %{remote_ip_address: "10.100.1.23", remote_port: 8805, weight:
20}
]
```

□□□□□□□□□□□□

1. □□□□□□□50 + 30 + 20 = 100
2. □□□□□□□0.0 □ 100.0
3. □□□□□□□□□□□□ UPF□
    - 0-50□UPF-1□50% □□□
    - 50-80□UPF-2□30% □□□
    - 80-100□UPF-3□20% □□□

□□□

- □□□□□ □□□□□□□□33□33□34□
- □/□□ □□□□□80□□□□□□□20□
- □□□□□ □□□ UPF □□□□□

PCO □□

□□□□□□ PCO□□□□□□□□□□□

```
%{
  name: "IMS □□",
  match_field: :apn,
  match_regex: "^ims",
  upf_pool: [...],
  pco: %{
    # □□□□□□□□
    p_cscf_ipv4_address_list: ["203.0.113.100", "203.0.113.101"],
    # □□□□□□□□ PCO □□□□□□□□
  }
}
```

□□□ PCO □□□□□

- `primary_dns_server_address`
- `secondary_dns_server_address`
- `primary_nbns_server_address`
- `secondary_nbns_server_address`
- `p_cscf_ipv4_address_list`
- `ipv4_link_mtu_size`

□□ DNS □□□

□□□□PGW-C □□□□□□□□□□□□ DNS NAPTR □□□

```
upf_selection: %{
  dns_enabled: true,
  dns_query_priority: [:ecgi, :tai, :rai, :sai, :cgi],
  dns_suffix: "epc.3gppnetwork.org",
  dns_timeout_ms: 5000
}
```

□□□□□□

1. **ECGI**□E-UTRAN □□□□□□□□□ - □□□
2. **TAI**□□□□□□□□□ - □□□□
3. **RAI**□□□□□□□□□□ - 3G/2G □□
4. **SAI**□□□□□□□□□□ - 3G □□□□

5. **CGI**□□□□□□□□□□ - 2G □□

□□ **DNS** □□□

```
# □□ ECGI □□□
eci-1a2b3c.ecgi.epc.mnc999.mcc999.epc.3gppnetwork.org

# □□ TAI □□□
tac-lb64.tac-hb00.tac.epc.mnc999.mcc999.epc.3gppnetwork.org
```

DNS □□□□□

1. □□□□□□□□□□□□ ECGI□□□ TAI □□
2. □□ DNS □□□□□□□□□□□□□□□□□□□□□□□□□□□□
3. □□□□□ UPF
4. □□□□ DNS □□□ DNS □□□□□□□□□□□

□□□ □□ DNS □ UPF □□ □□□□□□□□

□□ DNS □ UPF □□

□□

□□ DNS □ UPF □□□□ □□□□□□□□□□□ UE □□□□□□□□□□□□ULI□□□ DNS NAPTR □□□

3GPP □□□ TS 23.003 - UPF □□□ DNS □□

□□□

- □□□□□□□□□□ UPF
- □□□□□□□□□□□□□
- □□□□□□□□□□
- □□□□□□□□ UPF □□□□□□

□□□□

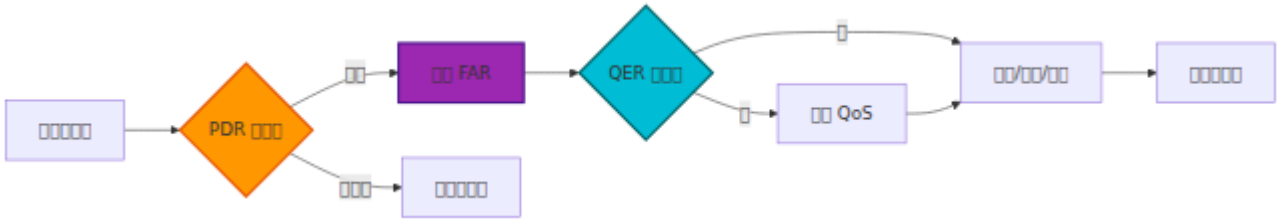

□□

```
config :pgw_c,
  upf_selection: %{
    # □□□□□ DNS □□□
    dns_enabled: true,

    # □□□□□□□□□□□□ ECGI□□□ TAI□□□ RAI □
    dns_query_priority: [:ecgi, :tai, :rai, :sai, :cgi],

    # □□□ DNS □□
    dns_suffix: "epc.3gppnetwork.org",

    # DNS □□□□
    dns_timeout_ms: 5000,

    # □□□□□□□□□□ DNS
    rules: [...],

    # □□ DNS □□□□□□
    fallback_pool: [...]
  }
```

DNS □□□□

DNS □□□□□□□ GTP-C □□□□□□□□□□ULI□□□□□

1. ECGI□E-UTRAN □□□□□□□□

□□□ - LTE □□□□□

□□□

```
eci-<HEX-ECI>.ecgi.epc.mnc<MNC>.mcc<MCC>.<dns_suffix>
```

□□□

```
# □□ ID: 0x1A2B3C□1,715,004 □□□□
# PLMN: MCC=999, MNC=999
eci-1a2b3c.ecgi.epc.mnc999.mcc999.epc.3gppnetwork.org
```

□□□□□ LTE□4G□□□

2. TAI□□□□□□□□

□□□□ - □□□□□□□□□□□□

□□□

```
tac-lb<LB>.tac-hb<HB>.tac.epc.mnc<MNC>.mcc<MCC>.<dns_suffix>
```

□□□

```
# TAC: 0x0064□100 □□□□
# □□□□0x64□□□□□0x00
tac-lb64.tac-hb00.tac.epc.mnc999.mcc999.epc.3gppnetwork.org
```

□□□□□ LTE□4G□□□□

3. RAI□□□□□□□□□

3G/2G □□□□

□□□

```
rac<RAC>.lac-lb<LB>.lac-hb<HB>.lac.rai.mnc<MNC>.mcc<MCC>.
<dns_suffix>
```

□□□

```
# RAC: 0x0A□10 □□□□
# LAC: 0x1234□4660 □□□□
rac0a.lac-lb34.lac-hb12.lac.rai.mnc999.mcc999.epc.3gppnetwork.org
```

□□□□□ 3G/2G UMTS/GPRS □□

4. SAI□□□□□□□□□□

3G □□□□

□□□

```
sac<SAC>.lac-lb<LB>.lac-hb<HB>.lac.sai.mnc<MNC>.mcc<MCC>.
<dns_suffix>
```

□□□

```
# SAC: 0x0001
# LAC: 0x1234
sac0001.lac-lb34.lac-
hb12.lac.sai.mnc999.mcc999.epc.3gppnetwork.org
```

□□□□□ 3G UMTS □□□□

5. CGI□□□□□□□□□□

2G □□□

□□□

```
ci<CI>.lac-lb<LB>.lac-hb<HB>.lac.cgi.mnc<MNC>.mcc<MCC>.
<dns_suffix>
```

□□□

```
# CI: 0x5678
# LAC: 0x1234
ci5678.lac-lb34.lac-hb12.lac.cgi.mnc999.mcc999.epc.3gppnetwork.org
```

□□□□□ 2G GSM □□

DNS □□□□

NAPTR □□□□□

DNS □□ NAPTR □□□□□ UPF IP □□□

```
eci-1a2b3c.ecgi.epc.mnc999.mcc999.epc.3gppnetwork.org.
  IN NAPTR 10 50 "a" "x-3gpp-upf:x-s5-gtp:x-s8-gtp" ""
upf1.epc.mnc999.mcc999.3gppnetwork.org.

upf1.epc.mnc999.mcc999.3gppnetwork.org.
  IN A 10.100.1.21
```

PGW-C □□□

1. □□ NAPTR □□□□□ UPF IP □□
2. □ DNS □□□□□□□□□□□□
3. □□□□□□□□□□□□□□□□□□□□□□□□□□□□□□

□□□

```
DNS □□□ [10.100.1.21, 10.100.5.99]

□□□    10.100.1.21□□□□□□□□
□□□      □□□□ upf_selection □□□□□□□
```

□□□□□□□

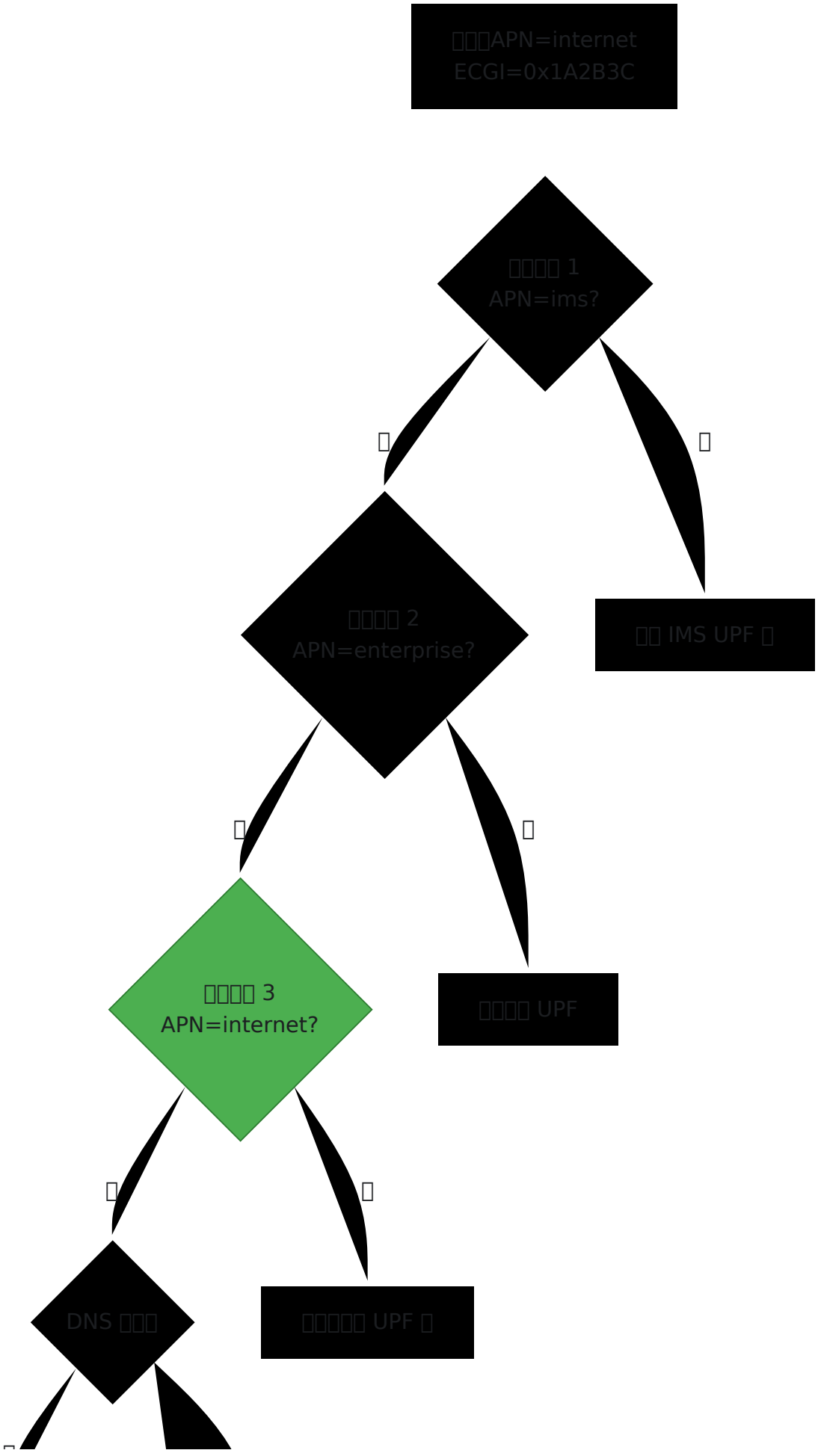
□□□APN=internet
ECGI=0x1A2B3C
□□□□ 1
APN=ims?
□
□
□□ IMS UPF □
□□□□ 2
APN=enterprise?
□
□
□□□□ UPF
□□□□ 3
APN=internet?
□
□
DNS □□□
□□□□□ UPF □
□

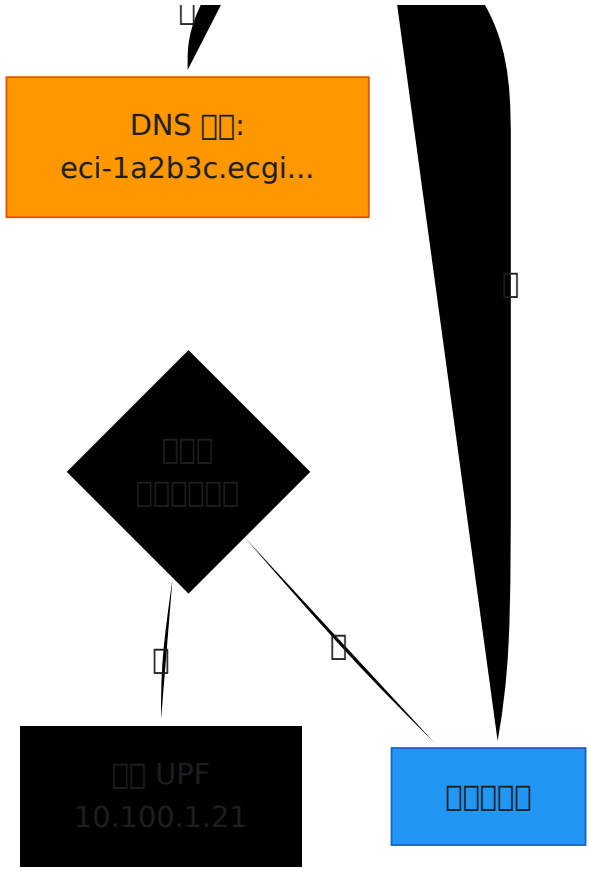

□□

1. □□□□□□□

□□□ □□□□□□□□□□□□ UPF

DNS □□□

```
# □□□□□□
eci-aaa.ecgi.epc.mnc999.mcc999.epc.3gppnetwork.org → UPF-□□□
□10.1.1.21□

# □□□□□
eci-bbb.ecgi.epc.mnc999.mcc999.epc.3gppnetwork.org → UPF-□□
□10.2.1.21□

# □□□□□□
eci-ccc.ecgi.epc.mnc999.mcc999.epc.3gppnetwork.org → UPF-□□□
□10.3.1.21□
```

□□□ □□□□□□□□□□□□ UPF□□□□□□□□□□□□

2. □□□□

□□□ □□□□□□□□ MEC□□□□□□□□□□UPF

DNS □□□

```
# □□□□□□□□□□□□ UPF
eci-*.ecgi.epc.mnc999.mcc999.epc.3gppnetwork.org → □□□□ UPF
```

□□□ □□□□□□□□□□

3. □□□□□□

□□□ □□□□□□□□□UPF □□□□□□□

□□□ □□ DNS □□□□□□□ PGW-C □□

□□□□ DNS □□

DNS □□□□

□□□

- □□□“DNS UPF □□□□□:nxdomain”
- □□□□□□□□

□□□□□

1. DNS □□□□□□□□
2. DNS □□□□□□□ ID
3. GTP-C □□□□□□ ULI

□□□□□

```
# □□□□□ DNS □□
dig eci-1a2b3c.ecgi.epc.mnc999.mcc999.epc.3gppnetwork.org NAPTR

# □□ PGW-C □□□□ DNS □□
grep "DNS UPF selection: querying" /var/log/pgw_c.log

# □□□□□□□□ ULI
# □□□□□□□□□□ "uli" □□
```

DNS □□□□ UPF

□□□

- DNS □□□□□ UPF □□ `upf_selection` □
- □□□□□□□□□□□
- □□ PFCP □□□□□□□□□□ UPF □□□□
- □□ PFCP □□□□□□□□□□□□□

□□□

```
DNS □□□ [10.99.1.50]
upf_selection: [10.100.1.21, 10.100.1.22]

□□□□□□□□ 10.99.1.50
  - □□ PFCP □□□□
  - □□□□□□□□□□
  - □□□□□□□□□□□□
```

□□□□□□□

1. □ `upf_selection` □□□□□□□□□□□□□□

```
upf_selection: %{
  fallback_pool: [
    %{remote_ip_address: "10.99.1.50", remote_port: 8805, weight:
100}
  ]
}
```

2. □□ DNS □□□□□□□□ UPF IP

3. □□□□□□□□□□□□ MEC/□□□□□

□□□□

□□□

- □□□“DNS UPF □□□□□□□”
- □□□□□□□□

□□□□□

```
upf_selection: %{
  dns_timeout_ms: 10000  # □□□□□□ 10 □
}
```

□□ DNS □□

□□□

```
# DNS □□□□□
rate(upf_selection_dns_success_total[5m]) /
rate(upf_selection_dns_attempts_total[5m])

# DNS □□□□
histogram_quantile(0.95,
rate(upf_selection_dns_duration_seconds_bucket[5m]))

# □□□□□□□□□ DNS □□□
rate(upf_selection_fallback_used_total[5m])
```

□□□

```
[debug] DNS UPF □□□□□ eci-
1a2b3c.ecgi.epc.mnc999.mcc999.epc.3gppnetwork.org
[debug] DNS UPF □□□□ DNS □□ 2 □□□□
[info]  DNS UPF □□□□□ 10.100.1.21
```

□□□

□□□□□□□□

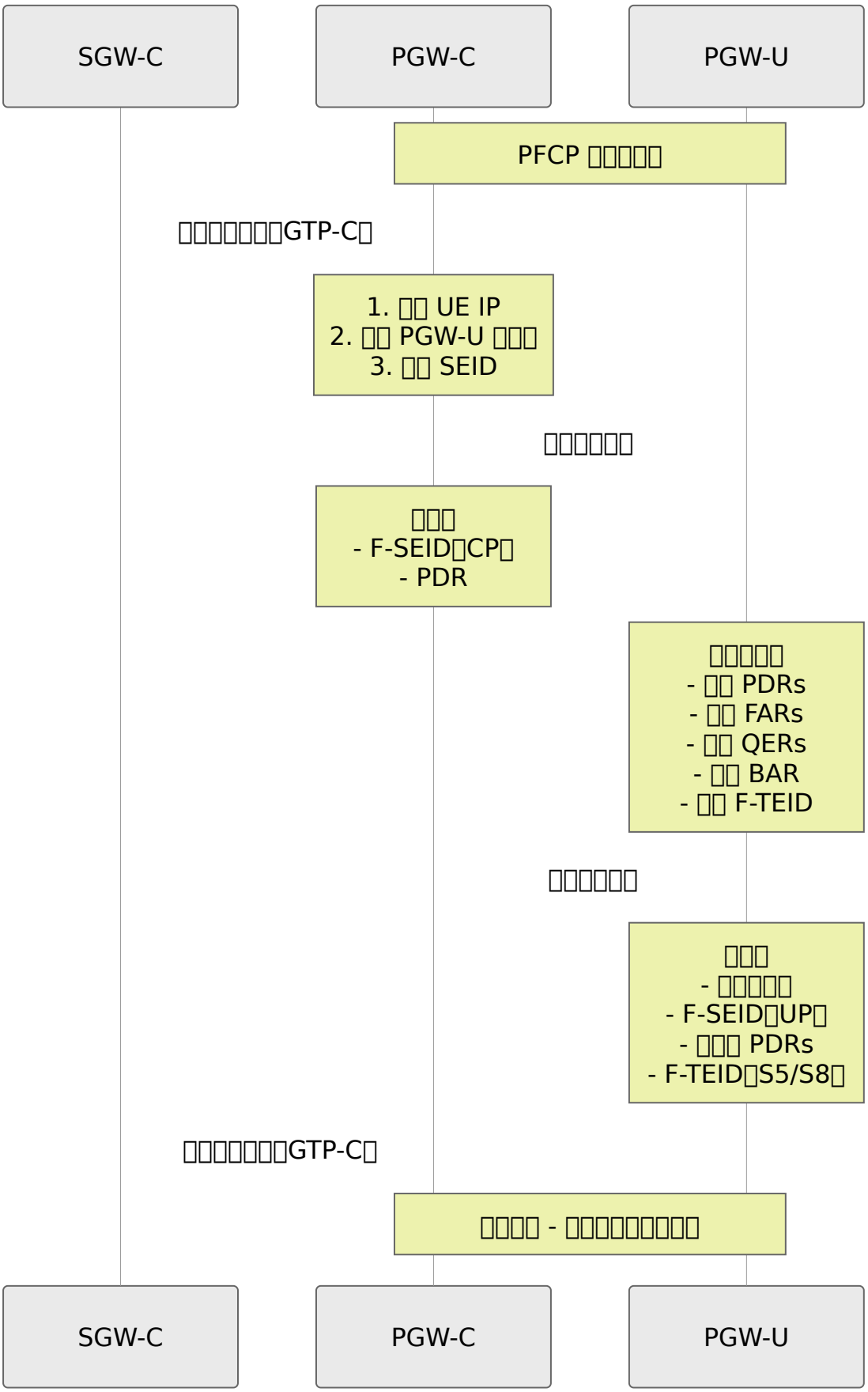
SGW-C
PGW-C
PGW-U
PFCP □□□□□□
□□□□□□□□□GTP-C□
1. □□ UE IP
2. □□ PGW-U □□□
3. □□ SEID
□□□□□□□
□□□
- F-SEID□CP□
- PDR
□□□□□
- □□ PDRs
- □□ FARs
- □□ QERs
- □□ BAR
- □□ F-TEID
□□□□□□□
□□□
- □□□□□
- F-SEID□UP□
- □□□ PDRs
- F-TEID□S5/S8□
□□□□□□□□□GTP-C□
□□□□ - □□□□□□□□□□
SGW-C
PGW-C
PGW-U

□□□□□

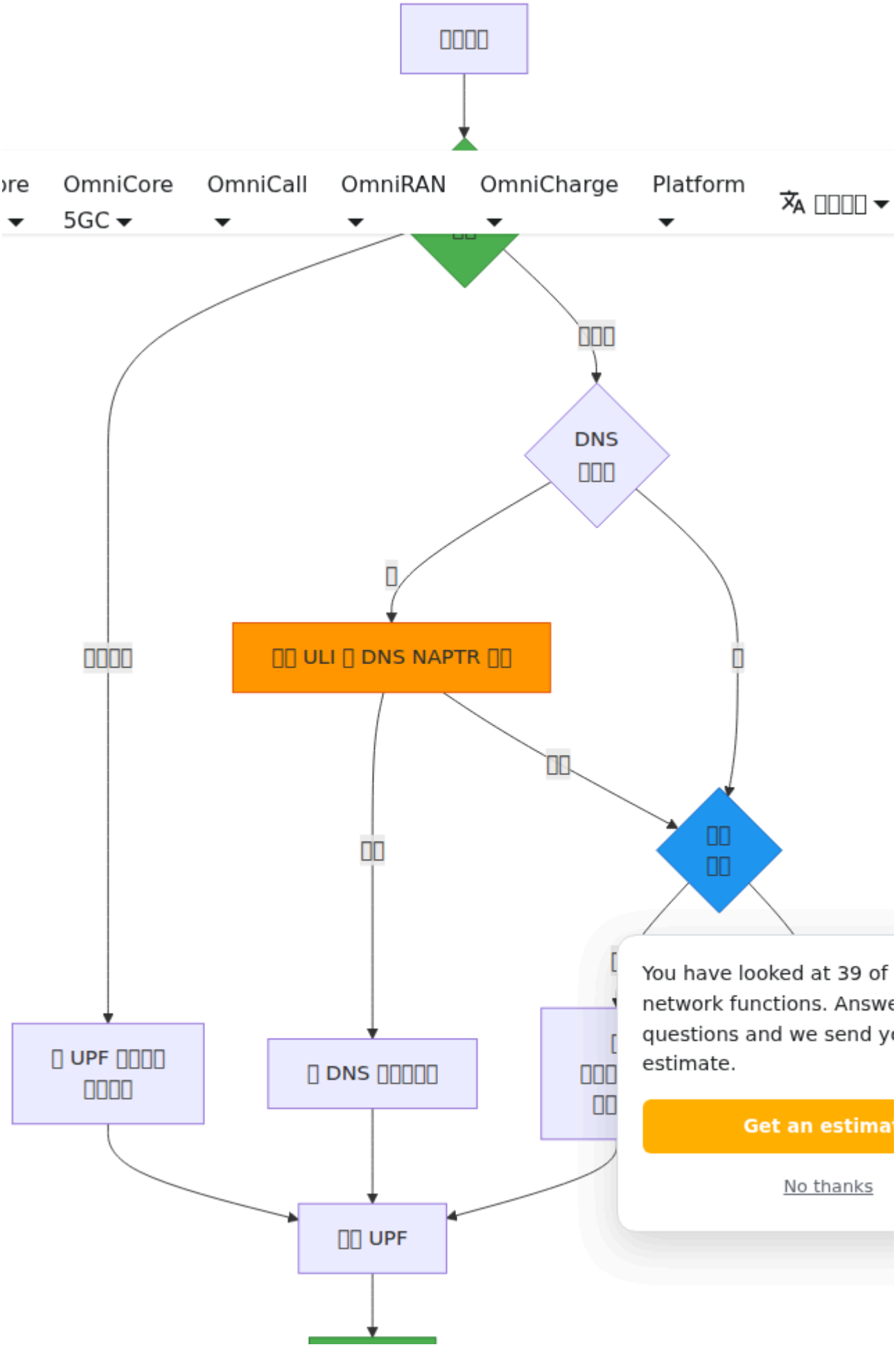
OmniCore 5GC
OmniCall
OmniRAN
OmniCharge
Platform
DNS
ULI DNS NAPTR
UPF
DNS
UPF
You have looked at 39 of
network functions. Answe
questions and we send y
estimate.
Get an estima
No thanks

□□□□

□□□□□□

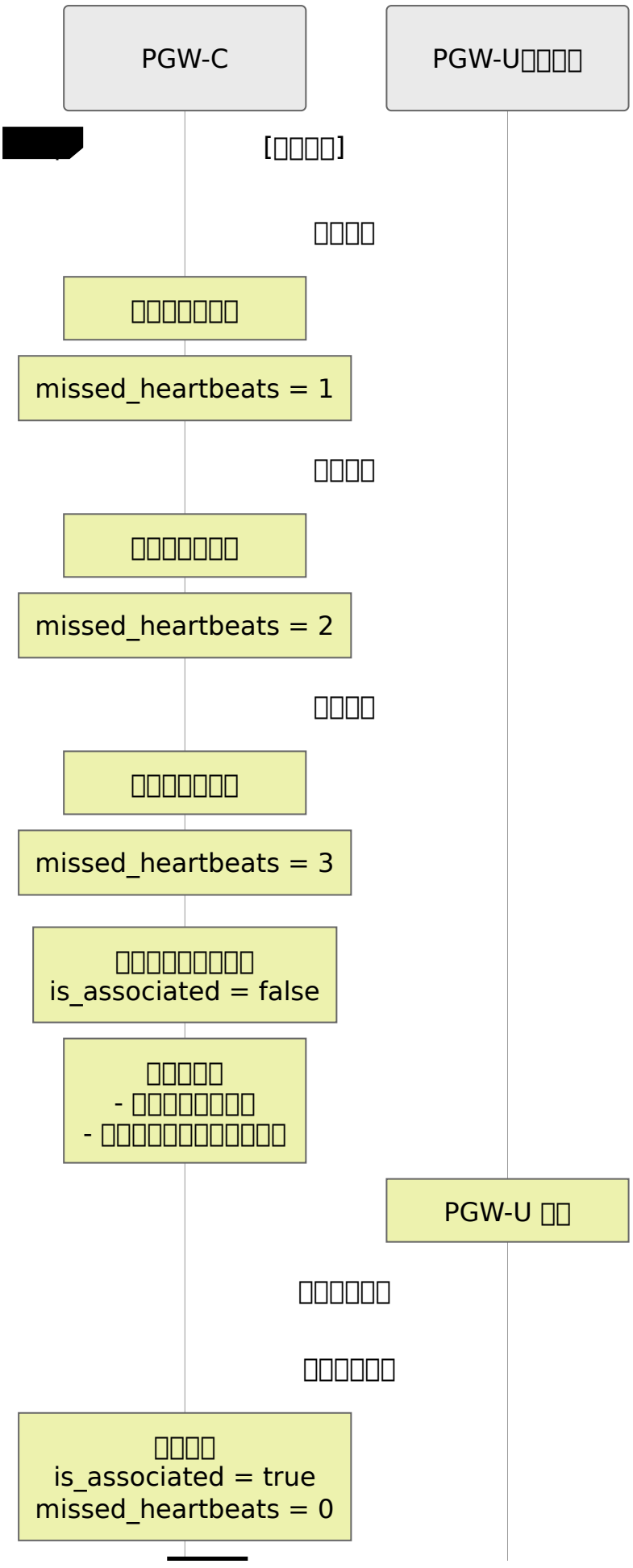
PGW-C
PGW-U□□□□
[□□□□]
□□□□
□□□□□□□□
missed_heartbeats = 1
□□□□
□□□□□□□□
missed_heartbeats = 2
□□□□
□□□□□□□□
missed_heartbeats = 3
□□□□□□□□□□
is_associated = false
□□□□□
- □□□□□□□□
- □□□□□□□□□□□□□
PGW-U □□
□□□□□□□
□□□□□□□
□□□□
is_associated = true
missed_heartbeats = 0

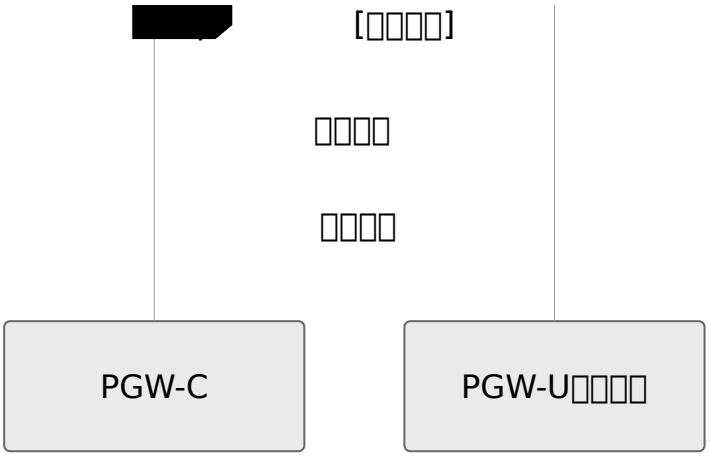

□□□□

□□□□

1. □□□□□□□

□□□

- □□□□□“PFCP □□□□□□”
- □□□□□□□□□□□□□

□□□□□

- PGW-U □□□□□□□□□□
- PGW-U □□□
- □□□□□ UDP □□ 8805
- □□□□ `remote_ip_address` □□□

□□□□□

```
# □□□□□□
ping <pgw_u_ip_address>

# □□ UDP □□
nc -u -v <pgw_u_ip_address> 8805

# □□□□□□
iptables -L -n | grep 8805
```

2. □□□□

□□□

- □□□“□□□□□□□□3”
- □□□□□□□□

□□□□□

- □□□□□□□□□□□
- PGW-U □□
- □□□□□□□□□

□□□□□

□□□□□□□ 5 □□□□□□□□□ 3 □□□□□□□

3. □□□□□□

□□□

- □□□□□□□□□□□□□□
- □□□“PFCP □□□□□□”

□□□□□

- □□□□□ PGW-U □□□
- PGW-U □□□□
- □□□□□□□

□□□

1. □□□□□□□□□□□ `is_associated = true`
2. □□ PGW-U □□□□□□
3. □□ SEID □□□□

4. □□ SEID □□

□□□

- □□□□□□□□□□“□□□□□□□□□”

□□□

- SEID □□□□□□□□
- PGW-U □□□ PGW-C □□

□□□□□

- □□□□ PFCP □□□□□□□□□□□□□□
- PGW-C □□□□ PGW-U □□□□□□□□

□□ PFCP □□

□□□□□□

```
# PFCP □□□□□□□□
pfcp_peer_associated{peer="PGW-U Primary"} 1

# □□ PFCP □□
seid_registry_count 150

# PFCP □□□□
rate(sxb_inbound_messages_total[5m])

# PFCP □□
rate(sxb_inbound_errors_total[5m])

# □□□□
pfcp_consecutive_heartbeat_failures{peer="PGW-U Primary"} 0
```

□□□□□

```
# □□□□□□□□
- alert: PFCPAssociationDown
  expr: pfcp_peer_associated == 0
  for: 1m
  annotations:
    summary: "PFCP □□□ {{ $labels.peer }} □□□"

# □□□□□□□□□□□□
- alert: PFCPSessionEstablishmentFailureHigh
  expr:
rate(sxb_inbound_errors_total{message_type="session_establishment_res
[5m]) > 0.1
  for: 5m
  annotations:
    summary: "PFCP □□□□□□□□"
```

PFCP □□

PFCP/Sxb □□□ UPF □□□□□□□ OAM REST API □□□□□ □ API □□ HTTPS/TLS □□□ `8443` □□□□□□□□□□□ `/api` □□□□□□□□□□□Swagger UI□□□ `https://<omnipgw-ip>:8443/api/docs` □□□

UPF / PFCP □□□□□

```
GET /api/upf            # □□ UPF / PFCP □□□ + □□
GET /api/upf/<ip>       # □□ IP □□□□ UPF
```

□□□ □□□□□□□□□ PGW-U □□□□ PFCP □□□□□

□□□

```
curl -k https://<omnipgw-ip>:8443/api/upf
curl -k https://<omnipgw-ip>:8443/api/upf/10.0.0.1
```

□□□□□ **PGW-U** □□□□□□ □□□

□□	□□
□□□□□	□□□□□□□□
IP □□	□□ PGW-U IP
□□□□	□□□□□□□
□□ ID	PFCP □□□□
□□□□□	□□□□□□□□□
□□□□	□□□□□□□
□□□□□□□	□□□□□□
UP □□□□	PGW-U □□□□□

`GET /api/upf/<ip>` □□□□□□□□□□□□□□□□ UP □□□□□□□□□□□□□□□

PFCP □□□□

□□ PFCP □□□□□□□□□□□□□□□□□□□□□□

```
GET /api/sessions/<imsi>
```

□□□□□□□□□□□□ PGW-U □□□□□□□□□□□□□□PDRs□FARs□QERs□BARs□□□□□□ F-SEIDs□

□□□□

□□ **PFCP** □□□□□

```
1. GET /api/upf
2. □□□□□□□□□□“□□□”
3. □□□□□□□□□□ = 0
4. □□□□□□□□□□“□□□”□
   - □□□□□□ IP □□□
   - □□□□□□□□□□□
   - □□□□□□□UDP 8805□
```

□□□□□□□□□□□□

```
1. □□□□□□□□□
2. GET /api/sessions/<imsi> - □□□□□□
3. □□□□□□ PFCP □□ - PFCP □□□□□□
4. □□□□ PFCP □□□
   - GET /api/upf - □□□□□□□□□□□□□
   - □□ PFCP □□□□□
5. □□ PFCP □□□□□
   - □□ PDRs/FARs □□□□□□□□□□
   - □□□□□□□□PGW-U □□□□
```

□□□□□□□□□□

```
1. □□□□□ PGW-U □□□
2. GET /api/upf □□□□□□□□□□□□
3. □□□□□□□□□□□□□
4. □□□□□□□□□□□□□□□□□□
```

□□□□□□□□

- `GET /api/upf` □□□□□□□□“□□□”□□
- □□□□□□□□□□□□□□□□□□□□
- □□ OAM API □□□□□□□□

□□□

- □□□□□□□ - □□□□□□□□□□ `GET /api/upf`
- □□□□ - □□□□□□□□□□/□□□
- □□□□□□□□ - □□□□□□□□□□□□□□
- □□□□□□ - □□□□□□□□ PDRs/FARs/QERs

□□□□

□□

- □□□□ - UPF □□□□□□□□PFCP □□
- □□□□ - PDN □□□□□□□□□□□

□□□□□

- **Diameter Gx □□** - □□ PFCP QoS □□□ PCC □□
- **Diameter Gy □□** - □□ URR □□□□□□□□□□
- **□□ CDR □□** - □ PFCP □□□□□□ CDR
- □□□□ - PFCP □□□□□□□□UPF □□□□

□□□□

- **S5/S8 □□** - □□□□□□□□□
- **UE IP □□** - □□ PFCP □□ UE □□□□

□□□□□□

QoS □□□□□

□□

PGW-C □□□□□□□□□□□□□□□ QoS □□□□□□□□□□□□□□□□

- **Gx (Diameter)** - □ PCRF □□□□□□□□ QoS □□
- **S5/S8 (GTP-C)** - □ SGW-C □□□□□□□□
- **Sxb (PFCP)** - □ QoS □□□□□□□□ PGW-U

□□□□

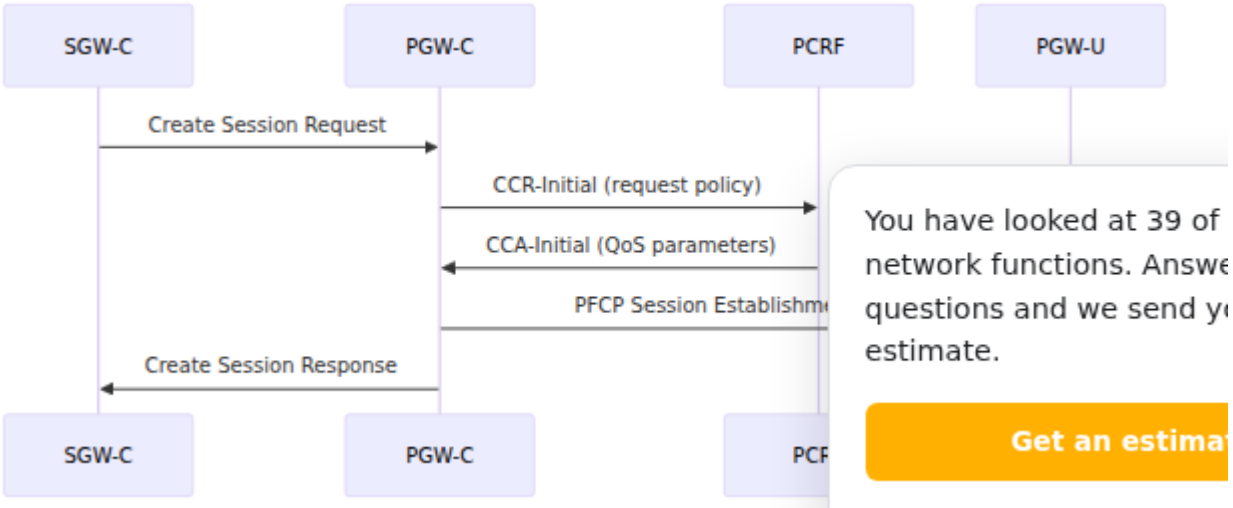

□□□□

- □□: □□ UE □□□□□□□□□PDR/FAR/QER/BAR □□□ AMBR
- □□□□□: □ EBI (EPS □□ ID) □□□□□□ PDR□FAR □ QER
- **QER (QoS □□□□)**: □□□□□□□□ MBR/GBR □□□□□□
- □□□□: □□□ PDN □□□□□□□□□□□□
- □□□□: □□ PCRF □□□□□□□□□□□□ QoS □□

□□

□□□□: □□ QoS □□

□□ QoS □□□□ Diameter Gx □□□□□□□ PCRF□□□ PCRF □□□□□□□□□□□□□□□ OmniHSS□□

□□□□ `config/runtime.exs` □□□ **PCRF** □□□

```
config :pgw_c,
  diameter: %{
    listen_ip: "0.0.0.0",
    host: "omni-pgw_c.epc.mnc999.mcc999.3gppnetwork.org",
    realm: "epc.mnc999.mcc999.3gppnetwork.org",
    peer_list: [
      %{
        host: "pcrf.epc.mnc999.mcc999.3gppnetwork.org",
        realm: "epc.mnc999.mcc999.3gppnetwork.org",
        ip: "192.168.1.100",
        initiate_connection: true
      }
    ]
  }
```

QoS □□□□□□□□□□□□□□□ **PCRF** □□□□□□□□□ PGW-C □□□□□□

□□□□□□

□□□□□

□□□□□ PDN □□□□□□□□□

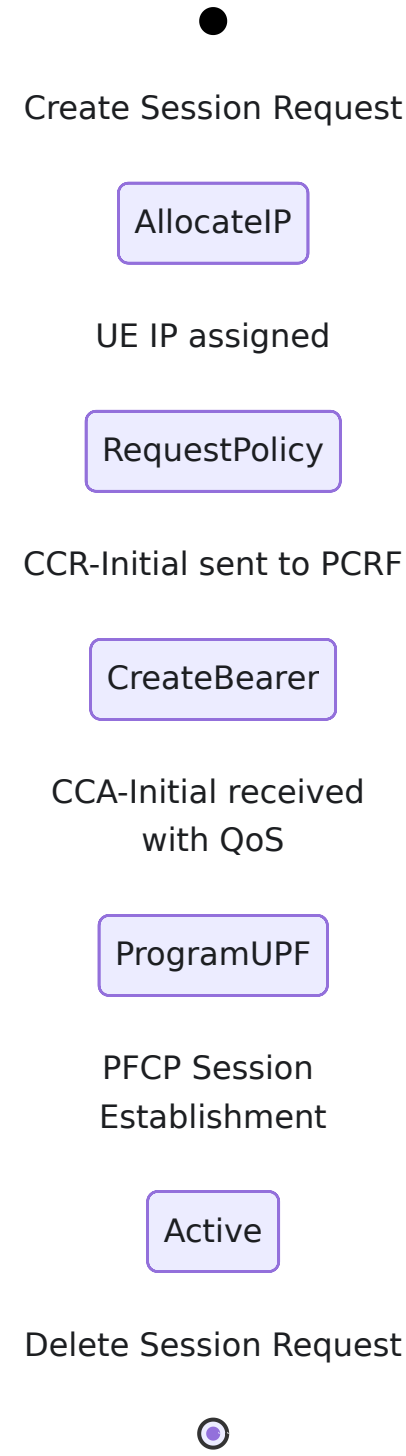

□□□□:

1. SGW-C □□ Create Session Request
2. PGW-C ���□□□□□□□ UE IP □□
3. PGW-C □ PCRF □□ CCR-Initial□□□ IMSI□APN□IP □□
4. PCRF □□□ QoS □□□ CCA-Initial □□□
   - Default-EPS-Bearer-QoS (QCI, ARP)
   - QoS-Information (AMBR □□)

5. PGW-C □□□□□□□□□□□□
    - □□ ID: □□ PDR=1□□□ PDR=2□□□ FAR=1□□□ FAR=2□QER=1□BAR=1
    - QER □□□□ QoS □□ MBR □□
6. PGW-C □ PGW-U □□ PFCP Session Establishment Request
7. PGW-C □ SGW-C □□ Create Session Response

□□□□□□□:

- □ PDN □□□□□□□□□□□□□□□
- □□□□ QCI 5 □ QCI 9□□ GBR□
- EBI □□□□□□□□□
- □□□□□□□□□□□□□□□□□□

□□□□□□

□□□□□□ PCRF □□□□□□□□

□□: □□ PCRF □□□□□□□□ (RAR)□□□ Charging-Rule-Install

□□□□:

1. PCRF □□ RAR□□□ Charging-Rule-Definition□□□□□□
    - Charging-Rule-Name□□□□□□□□□
    - Flow-Information□□□□□□□□
    - QoS-Information□QCI□MBR□GBR□ARP□
    - Precedence□□□□□□□□□
2. PGW-C □□□□□□□□ PFCP □□□
    - □□ Flow-Information □□ → □ PDR□□ SDF □□□
    - QoS-Information → □ QER□□ MBR/GBR □□
    - Flow-Description → IP 5-□□□□□□
3. PGW-C □□ PFCP Session Modification Request □□□ PDRs/FARs/QERs
4. PGW-C □ SGW-C □□ Create Bearer Request
5. SGW-C □ Create Bearer Response □□□

□□ **Charging-Rule-Definition:**

```
Charging-Rule-Name: "video_streaming"
Flow-Information:
  - Flow-Description: "permit in ip from any to 10.0.0.1 5000-
6000"
    Flow-Direction: 1 (downlink)
QoS-Information:
  QoS-Class-Identifier: 7
  Max-Requested-Bandwidth-UL: 5000000 (5 Mbps)
  Max-Requested-Bandwidth-DL: 10000000 (10 Mbps)
  Guaranteed-Bitrate-UL: 1000000 (1 Mbps)
  Guaranteed-Bitrate-DL: 2000000 (2 Mbps)
Precedence: 100
Flow-Status: 2 (ENABLED)
```

□□□□□□□□□□

□□□□□□□□ QCI □ ARP □□□□□□□□□□□□□□□□□□TS 29.212 §4.5.2□□□□□□□□□□□□

□□□□□□□□□□□□□ Flow-Description □ `permit out ip from any to any`□□□□ MBR □□□□□□□□ QER □□ APN-AMBR□

- □□□□□CCA-Initial □ RAR□□□□ QER □ MBR □□ APN-AMBR □□□□ MBR □□□□□□□□□□□□ CCA-Initial □□□□□□□□□□□□□□ QER □□
- □ Charging-Rule-Remove □□QER □□ APN-AMBR□
- PCRF □□□ APN-AMBR □□□□□□□□□□□□□□□

□□□□□□□□□□□□□ Sy □□□□□PCRF □□□□□□□□□ `throttle`□QCI 9□MBR 1 Mbit/s□□□□□□□□□□□□□□□□□

□□□□□□□□□□□□□□□□□□□□□□□ Flow-Status □□□□□□□□□□□□□□□ PDR□□□□□□□□□□□□□ RAR □□ DIAMETER_UNABLE_TO_COMPLY (5012) □□□□ CCA-Initial □□□□□□□□□□

□□□□

□□ QoS □□□□□□□□□□□□

- **Gx RAR**□□□□□ Charging-Rule-Definition

- **PFCP Session Modification**□□□□□□□ QER□□□□□□□□FAR□□□□□□□ PDR□□□□□ □□□□□

□□□□

□□:

- **Delete Session Request**□SGW □□□ - □□□□□□□□□□□□
- **Re-Auth Request with Charging-Rule-Remove**□PCRF □□□ - □□□□□□

□□□□:

1. □□□□□□□□□□
2. □□□□□ PDRs/FARs/QERs
3. □ SGW-C □□ Delete Bearer Request□□□□ PCRF □□□
4. □□ PFCP Session Modification□□□□□□□ Session Deletion□□□□□□□□□

QoS □□

QCI (QoS □□□□)

□□: PCRF □□ Gx `QoS-Class-Identifier` AVP

□□□:

- **QCI 1**: □□□□□GBR□100ms □□□□□
- **QCI 2**: □□□□□GBR□150ms □□□□□
- **QCI 3**: □□□□□GBR□50ms □□□□□
- **QCI 4**: □□□□□□GBR□300ms □□□□□
- **QCI 5**: IMS □□□□ GBR□100ms □□□□□ - □□□□□□□□
- **QCI 6**: □□□□□ TCP□□□□□□□ GBR□300ms □□□□□
- **QCI 7**: □□□□□□□□□ GBR□100ms □□□□□
- **QCI 8**: □□□□□ TCP□□□□ YouTube□□ GBR□300ms □□□□□
- **QCI 9**: □□□□□□□ GBR□300ms □□□□□

□□□□□□□:

- QCI □ PCRF □□□□□ Bearer-Level-QoS IE □□ SGW-C □□
- PGW-C □□□□□ QCI □□ - □□□□□□□ QER □□ MBR/GBR
- □□□ QCI □□□□□□□□□□□
- QCI □□□□□□□□□□□□□□□□

ARP (□□□□□□□□)

□□**:** PCRF □□ `Allocation-Retention-Priority` □□ AVP

□□**:**

- □□□□□: 1□□□□□□□□ 15□□□□□□□
- □□□□: □□□□□□□□□□□□□□□□□□□□
  - 0 = □□□□□□□□□□
  - 1 = □□□□□□□□
- □□□□□: □□□□□□□□□□□□□□□□□□□□
  - 0 = □□□□□□□□□
  - 1 = □□□□□□□□□

□□□**:**

- □□□□□: 1
- □□□□: □□ (0)
- □□□□□: □□ (1)

□□□□□□□**:**

- ARP □ SGW-C □□□□□□ eNodeB
- **PGW-C** □□□ - □□□□□ eNodeB □□□□□□□□□□
- □□□□□□□□□□□□□□□□□□□□□□
- □□□□□□□□□□□□□ 1□□□□□□□□□□

MBR (□□□□)

□□**:** PCRF □□ `Max-Requested-Bandwidth-UL` □ `Max-Requested-Bandwidth-DL` AVP

□□**:** □□□□□□□□□ kbps: `bytes / 1000`□

□□□□: □□□□□□□□□□□□□

□□□□:

- PGW-C □□ QER□□ `mbr: %Bitrate{ul: kbps_ul, dl: kbps_dl}`
- QER □□ PFCP □□□ PGW-U
- **PGW-U** □□□□□□□□□□□□□
- □□ MBR □□□□□□□□□

□□:

```
Max-Requested-Bandwidth-UL: 5000000 (5 Mbps)
Max-Requested-Bandwidth-DL: 10000000 (10 Mbps)

→ QER □□□ mbr: {ul: 5000, dl: 10000} kbps
→ PGW-U □□□□ 5 Mbps □□□□□□
→ PGW-U □□□□ 10 Mbps □□□□□□
```

GBR (□□□□□)

□□: PCRF □□ `Guaranteed-Bitrate-UL` □ `Guaranteed-Bitrate-DL` AVP

□□: □□□□□□□□ kbps□

□□□□: □□□□□□□□□GBR □□□

□□□□:

- □□□ Charging-Rule-Definition □□□□ GBR□□□□□ **GBR** □□
- PGW-U □□ QER □□□□□□□□□
- □□□ eNodeB □□□□□□□□□□□□□
- GBR □□□□□□□□ - □□□□□□□□□□□□□

□□:

```
Guaranteed-Bitrate-UL: 1000000 (1 Mbps)
Guaranteed-Bitrate-DL: 2000000 (2 Mbps)

→ QER □□□ gbr: {ul: 1000, dl: 2000} kbps
→ □□□□□□□ 1 Mbps □□□□ 2 Mbps □□□
→ □□ VoIP□□□□□□□□□□
```

□□□□□□□□:

- GBR □□□□□□□□□□□□
- □□□□ GBR □□□□□□□□□□
- □□□□□□□□□□□□□□□ GBR □□□□

AMBR (□□□□□□□)

□□: PCRF □□ `APN-Aggregate-Max-Bitrate-UL` □ `APN-Aggregate-Max-Bitrate-DL` AVP

□□: □□□ □□□ **GBR** □□ □ APN□□□□□□□□□

□□□□:

- AMBR □□□□□□□ GBR □□□□□□□
- □ Create Session Response □□□□ SGW-C
- □□□□□ eNodeB/SGW □□
- PGW-C □□□□□□□□ AMBR□□□□□□□ SGW-C

□□:

```
APN-Aggregate-Max-Bitrate-UL: 50000000 (50 Mbps)
APN-Aggregate-Max-Bitrate-DL: 100000000 (100 Mbps)

→ □□□ GBR □□□□□□□□□ 50 Mbps □□ / 100 Mbps □□
→ □□□□□□□□ MBR □□
→ AMBR □□□ UE/APN □□□□□□□□□
```

□□□□□□□□:

- □□ HSS/PCRF □□□□□□□□□□□□
- □□□□□□□□□□□□□10 Mbps □□□ 100 Mbps □□□
- □□□ GBR □□

□□□□□□

□□□ (Gx) □□□□ (PFCP) □□

PCRF □□□□□□□□□□ Charging-Rule-Definition □□ `Flow-Status` AVP□

□□□ (Gx)	□□□ (PFCP QER)	□□
0 = ENABLED-UPLINK	ul: OPEN, dl: CLOSED	□□□□□□□
1 = ENABLED-DOWNLINK	ul: CLOSED, dl: OPEN	□□□□□□□
2 = ENABLED	ul: OPEN, dl: OPEN	□□□□□□□
3 = DISABLED	ul: CLOSED, dl: CLOSED	□□□□□
4 = REMOVED	ul: CLOSED, dl: CLOSED	□□□□□□□

□□:

- **DISABLED**: □□□□□□□□□□□□□□□□□□□□□□□□□□□□
- **ENABLED-UPLINK**: □□□□□□□□□□□□□□□
- **ENABLED-DOWNLINK**: □□□□□□□□□□□□□□
- **ENABLED**: □□□□

□□□□□□□

Prometheus □□

□□□□□□□:

```
session_registry_count        # □□□□ (IMSI, EBI □)
address_registry_count        # ���□□ UE IP
charging_id_registry_count    # □□□□□□
```

Gx □□□□:

```
gx_inbound_messages_total{message_type="gx_RAR"}     # □□ PCRF □□□
□□
gx_outbound_messages_total{message_type="gx_CCR"}    # □ PCRF □□□□
□
gx_outbound_transaction_duration_bucket              # □ PCRF □□□
```

PFCP □□□□:

```
sxb_outbound_messages_total{message_type="pfcp_session_establishment_
sxb_outbound_messages_total{message_type="pfcp_session_modification_r
sxb_outbound_transaction_duration_bucket
```

□□□□□□:

```
s5s8_inbound_messages_total{message_type="create_session_request"}
# □□□□
s5s8_outbound_messages_total{message_type="create_bearer_request"}
# □□□□
```

□□ OAM API □□

□□□ QoS □□□□ OAM REST API□HTTPS/TLS □□□ `8443`□□□□ `/api` □□□□□□□□□□□□□□□□□□□□□Swagger UI□□□ `https://<omnipgw-ip>:8443/api/docs` □□□

□□□ QoS □□□□□□□□□□□□□□□□□□□□□□□□

```
GET /api/sessions/<imsi>       # □□□□□□□□□□□□□□□QCI/5QI□□□□□
```

□□□

```
curl -k https://<omnipgw-ip>:8443/api/sessions/999000123456789
```

□□□□□□□□□□□□□□□□□□□□ QoS ◆◆◆□□QCI/5QI□MBR□GBR□AMBR□□□□□□□□□□□□□□□□ QER □□□□□□□□□□□□□□□□□□□□

□□□□□ QoS

□□: □□□□□□□ QoS □□□

□□:

1. □□ **PCRF** □□:
   - □□ PCRF □□□□ = "connected"□□□ Diameter/Gx □□□□□□□□
   - □□□□□□□□□□□□□□ Diameter □□
2. □□ **CCR/CCA** □□:
   - □ OmniPGW □□□□□ "Credit Control Answer"
   - □□ CCA □□□□□ `QoS-Information` AVP
   - □□ CCA □□□□□Result-Code □□ 2001 = SUCCESS□
3. □□ **PFCP** □□:
   - □□□□□□ "PFCP Session Establishment Request"
   - □□□□□□□ QER
   - □□ PGW-U □□□□ PFCP □□□□
4. □□ **PCRF** □□□□:
   - □□ PCRF □□□□□□□□□
   - □□□□□□□ APN □□□□□
   - □□ PCRF □□□□□□□□□□

□□□□□□□□

Prometheus □□:

```
# □□□□□□□□□□□□/□□
rate(s5s8_inbound_messages_total{message_type="create_session_request
[5m])

# □□□□□□□□□
rate(s5s8_outbound_messages_total{message_type="create_bearer_request
[5m])

# □□ PCRF □□□□□□□
rate(gx_inbound_messages_total{message_type="gx_RAR"}[5m])
```

□□□□

□□□□□□:

```
# UE IP □□□□□□□□□□
(address_registry_count / <configured_pool_size>) * 100

# □□□□□□
session_registry_count

# PCRF □□□□□P95□
histogram_quantile(0.95, gx_outbound_transaction_duration_bucket)
```

□□□□:

- □□□□□□□□ `config/runtime.exs` □□ `ue.subnet_map` □□□
- TEID □□□32 □□40 □□□□□□□□□□□□□□□
- □□□□□□□□□□□□□□□□□

□□□□:

- □□ IP □□□□□ - □□□ 80% □□□□□
- □□ PCRF □□ - □□□□□□□□□□□
- □□□□□□□□□□ - □□□□□□□

□□□□

- □□□□ - PDN □□□□□□
- Diameter Gx □□ - PCRF □□□□□□□□
- PFCP □□ - □□□□□□
- □□□□ - □□□□
- □□□□ - □□□□□□□

S5/S8 □□□□

□ SGW-C □ GTP-C □□

OmniPGW □ Omnitouch □□□□□□

□□

S5/S8 □□ □□ **GTP-C v2**□GPRS □□□□ - □□□□□□□□ OmniPGW □□□ SGW-C□□□□□□□□ □□□□□□□□□□□□□□□□□□□□□□□□

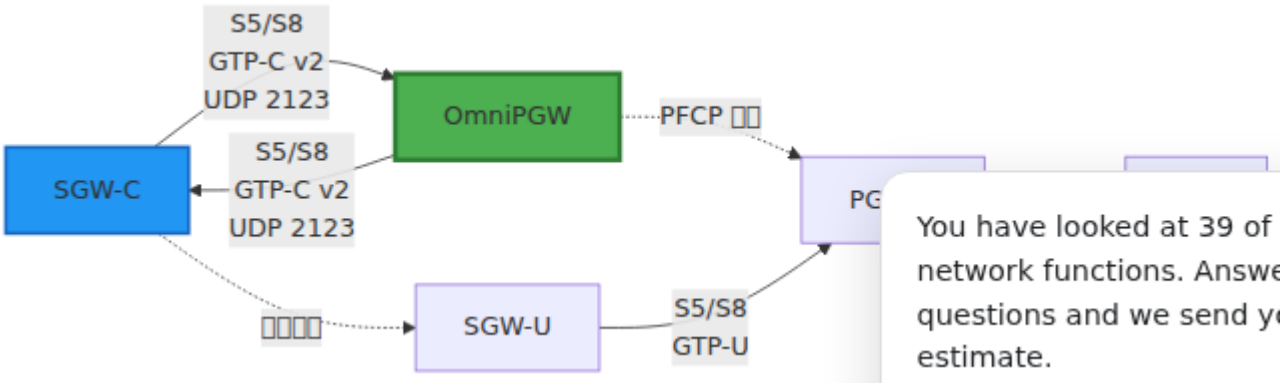

□□□□

GTP-C □□ 2

- □□□ GTP-C v2 (3GPP TS 29.274)
- □□□ UDP
- □□□ 2123□□□□
- □□□□□ □□□□

TEID□□□□□□□□□

□□□□□□□□□□□ **TEID** □□□□□□□

- □□ **TEID** - □ OmniPGW ���□□□□□□
- □□ **TEID** - □ SGW-C □□□□□□□□

```
□□□□
  SGW-C → OmniPGW: □□ TEID = OmniPGW □□□ TEID
  OmniPGW → SGW-C: □□ TEID = SGW-C □□□ TEID
```

□□

□□□□

```
# config/runtime.exs
config :pgw_c,
  s5s8: %{
    # S5/S8 □□□□□ IPv4 □□
    local_ipv4_address: "10.0.0.20",

    # □□□□□ IPv6 □□
    local_ipv6_address: nil,

    # □□□□□□□□□□
    local_port: 2123,

    # GTP-C □□□□□□□□□□□□□500ms□
    # □□ GTP-C □□□□□□□□□□□□□□□□□□□□□□□□□□□□
    request_timeout_ms: 500,

    # GTP-C □□□□□□□□□□□□3□
    # □□□□□□□□ = request_timeout_ms * request_attempts
    # □□□500ms * 3 □□□ = 1500ms□1.5 □□□□
    request_attempts: 3
  }
```

□□□□

S5/S8 □□□□□□□□□□□□□□□ GTP-C □□/□□□□□

□□□

- **`request_timeout_ms`** - □□□□□□□□□□□□□□□□□500ms□
- **`request_attempts`** - □□□□□□□□□□□□□□□3□

□□□□□□□ `request_timeout_ms × request_attempts`

□□□□□□ 500ms × 3 □□□ = □□□□□□ **1.5** □

□□□□□□

��□□□	□□ **`request_timeout_ms`**	□□□□□□
□□□ (<50ms)	200-300ms	600-900ms□3 □□□□
□□□50-150ms□	500ms□□□□	1.5s□3 □□□□
□□□ (>150ms)	1000-2000ms	3-6s□3 □□□□
□□□/□□	2000-3000ms	6-9s□3 □□□□

□□ **-** □□□□□□□

```
s5s8: %{
  local_ipv4_address: "10.0.0.20",
  request_timeout_ms: 1500,  # □□□□ 1.5 □
  request_attempts: 3         # □□□□□ 4.5 □
}
```

□□□□□□□□

- OmniPGW □□□□□"□□□□□□□□□"
- □□□□□ PCRF□□□□□□□□5012 UNABLE_TO_COMPLY□
- □□□□□□□□□□□□□□ Charging-Rule-Remove □□□□

□□□□

□□□□□□□

```
# □□□□ SGW-C □□□ GTP-C
iptables -A INPUT -p udp --dport 2123 -s <sgw_network>/24 -j
ACCEPT

# □□□ SGW-C □□□ GTP-C
iptables -A OUTPUT -p udp --dport 2123 -d <sgw_network>/24 -j
ACCEPT
```

□□□

```
# □□□ SGW-C □□□□□
ip route add <sgw_network>/24 via <gateway_ip> dev eth0
```

□□□□

S5/S8 □□□□ PDN □□□□□ GTP-C □□□□□

IE □□	□□	□□
IMSI	□□	□□□□□□□□□
MSISDN	□□	□□□□
APN	□□□	□□□□□□□□□□“internet”□
RAT □□	□□	□□□□□□□EUTRAN□
□□□□□	□□	□□□□□□
UE □□	□□□	UE □□□
ULI	□□	□□□□□□□TAI□ECGI□
□□□□	PLMN	□□□□□ MCC/MNC

□□□

```
□□□□□□□
├── IMSI: 310260123456789
├── MSISDN: 14155551234
├── APN: internet
├── RAT □□: EUTRAN (6)
├── □□□□□
│   ├── EBI: 5
│   ├── □□ QoS (QCI 9, ARP, □□□)
│   └── S5/S8 F-TEID (SGW-U □□□□)
└── ULI
    ├── TAI: MCC 310, MNC 260, TAC 12345
    └── ECGI: MCC 310, MNC 260, ECI 67890
```

□□□□□□

□□□ OmniPGW → SGW-C

□□□ □□□□□□

□□□□□□□□

IE □□	□□	□□
□□	□□	□□□□□□□□
□□□□□□	□□	□□□□□
PDN □□□□□	IP	□□□ UE IP □□□□□ UE IP □□□
APN □□	□□	APN □□□□
PCO	□□	□□□□□□□□□ PCO □□□

□□□□□□

```
□□□□□□□□
├── □□: □□□□□□ (16)
├── PDN □□□□□
│   └── IPv4: 100.64.1.42
├── □□□□□□
│   ├── EBI: 5
│   ├── □□: □□□□□□
│   └── S5/S8 F-TEID (PGW-U □□□□□□□ PFCP)
├── APN □□: Public-1 (1)
└── PCO
    ├── DNS □□□: 8.8.8.8
    ├── DNS □□□: 8.8.4.4
    └── □□ MTU: 1400
```

> PDN □□□□□□□□□□□□ PDN □□□TS 29.274 §8.14□□□□ 4 □□□ IPv4 □□□□□□□□□□□□□□□ 16 □□□ IPv6 □□□□□□□□ IPv4v6□□□□□□□□□□□□ 16 □□□ IPv6 □□ 4 □□□ IPv4□□□□□□□ □□□ IPv6 □□□□□□SOS□APN □ IPv4v6 PDN□□ PGW-C □□□□ IPv4 □ PAA□□□ APN □ □□□——□ □ APN □□ IPv6 □□□ IPv4v6 □□□

□□□□□□□

□□□ SGW-C → OmniPGW

□□□ □□ PDN □□

□□□□□□□

IE □□	□□
EBI	□□□□ EPS □□ ID
□□ EBI	□□□□□□□□

□□□□□□

□□□ OmniPGW → SGW-C

□□□ □□□□□□

□□□□□□□

IE □□	□□
□□	□□□□□□□

□□□

□□□□□□

□□□ OmniPGW → SGW-C

□□□ □□□□□□□□ PCRF □□□□

□□□□

- PCRF □□□ PCC □□□□□□□□
- OmniPGW □□ SGW-C □□□

□□□□□□

□□□ OmniPGW → SGW-C □ SGW-C → OmniPGW

□□□ □□□□□□□

□□□

- **PGW** □□□ PCRF □□□□□□□□□□□□
- **SGW** □□□ □□□□□□□

□□□

□□□□

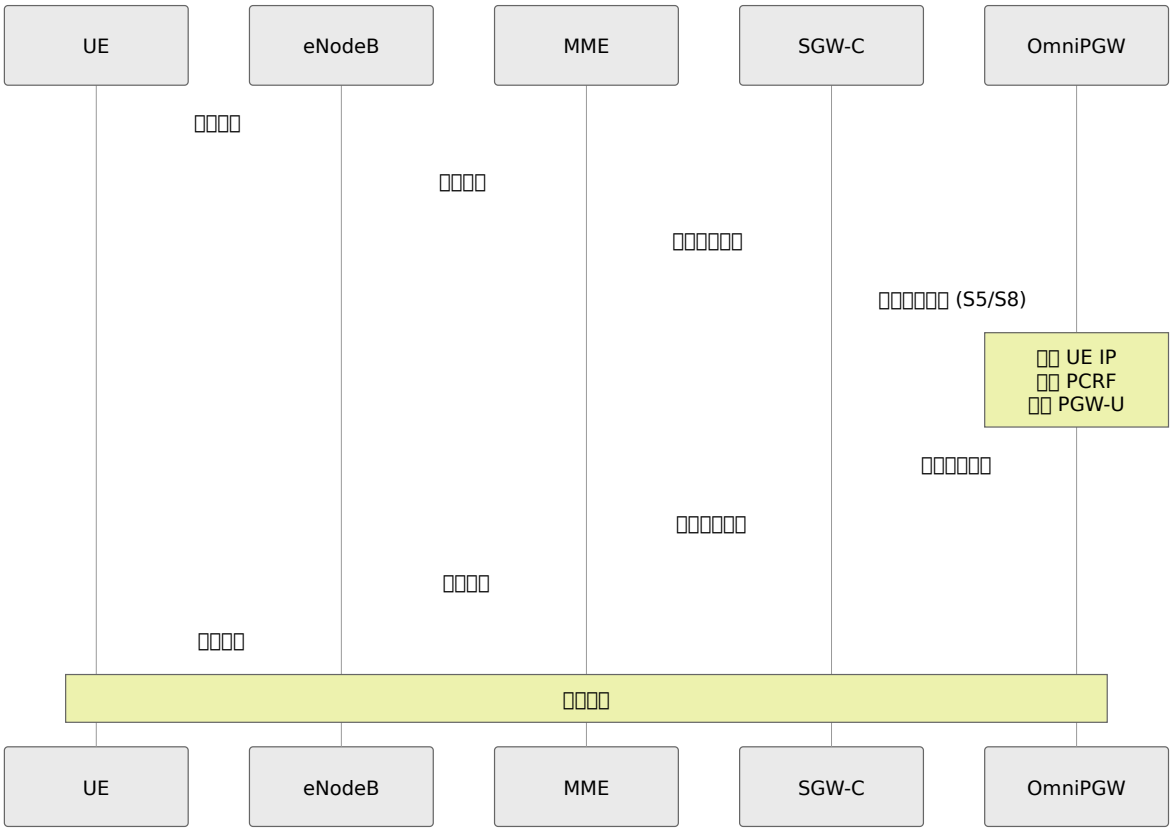
UE
eNodeB
MME
SGW-C
OmniPGW
□□□□
□□□□
□□□□□□□
□□□□□□□ (S5/S8)
□□ UE IP
□□ PCRF
□□ PGW-U
□□□□□□□
□□□□□□□
□□□□
□□□□
□□□□
UE
eNodeB
MME
SGW-C
OmniPGW

□□□□

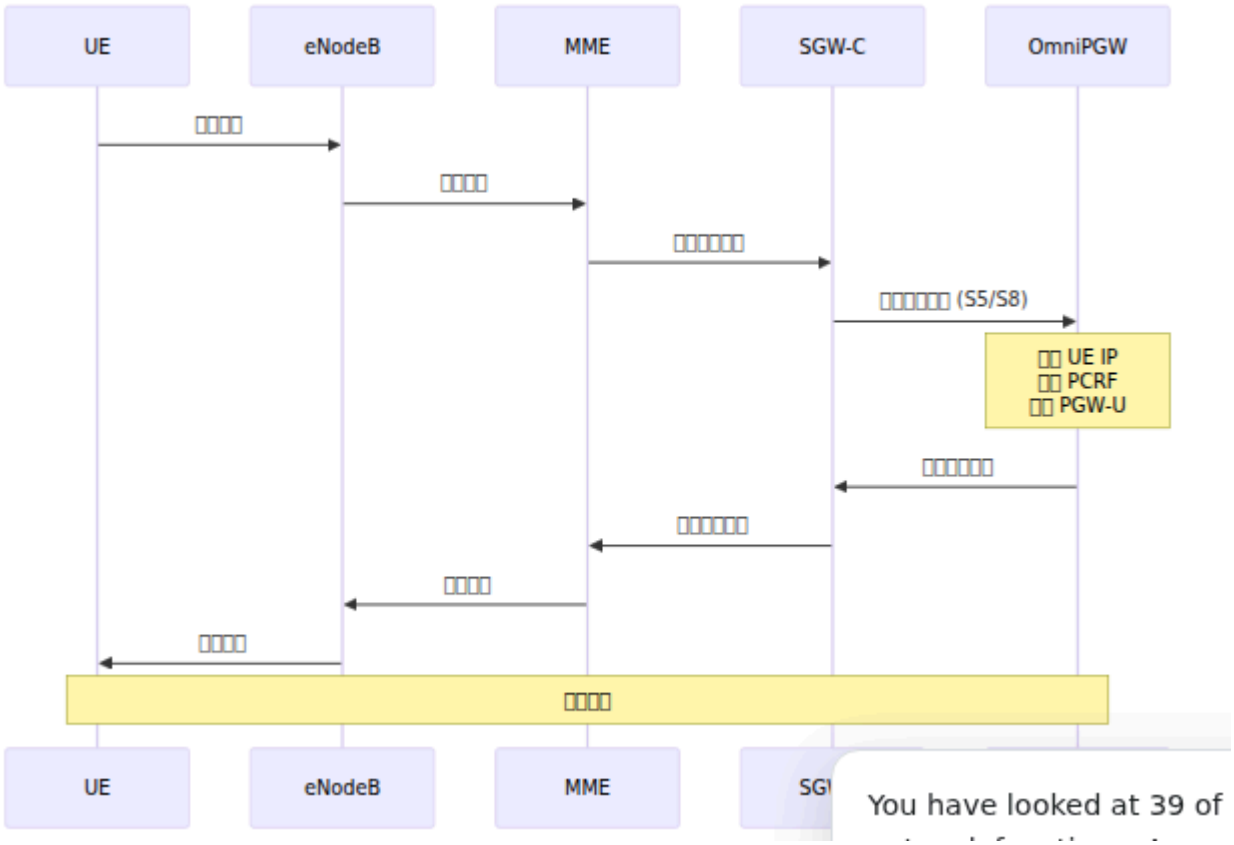
UE
eNodeB
MME
SGW-C
OmniPGW
□□□□
□□□□
□□□□□□□
□□□□□□□ (S5/S8)
□□ UE IP
□□ PCRF
□□ PGW-U
□□□□□□□
□□□□□□□
□□□□
□□□□
□□□□
UE
eNodeB
MME
SG
You have looked at 39 of

□□□□

□□

□□	□□	□□
16	□□□□□□	□□□□

□□□□□□□□

□□	□□	□□□□
65	□□□□	PCRF □□□□□□ IMSI□
66	□□□□□	IP □□□
93	□□□□□	□□□ APN
94	TFT □□□□□□	□□□□□□□□□

□□□□□□□□

□□	□□	□□□□
72	□□□□□□□□	PCRF/PGW-U □□
73	□□□□□□□□□	□□□□

□□

S5/S8 □□

```
# □□□□□□
s5s8_inbound_messages_total{message_type="create_session_request"}
s5s8_inbound_messages_total{message_type="delete_session_request"}

# □□□□□□
s5s8_inbound_errors_total

# □□□□□□□□
s5s8_inbound_handling_duration_bucket

# □□ TEID
teid_registry_count
```

□□□□□

□□□□□□□

```
rate(s5s8_inbound_messages_total{message_type="create_session_request
[5m])
```

□□□□

```
rate(s5s8_inbound_errors_total[5m])
```

□□□**p95**□□

```
histogram_quantile(0.95,

rate(s5s8_inbound_handling_duration_bucket{request_message_type="crea
[5m])
)
```

□□□□

□□□□□□□□ OmniPGW □□□

□□□

- SGW-C □□□□□□□□□
- □□□□□□□
- SGW-C □□

□□□

1. □□□□□□□
2. OmniPGW □□□□□ IP □□□
3. □□□□□ UDP 2123
4. □□□□ TEID □□

□□□

```
# □□ OmniPGW □□□□□
netstat -ulnp | grep 2123

# □□□□□□□□
tcpdump -i any -n port 2123

# □□□□
grep "local_ipv4_address" config/runtime.exs

# □□□□□
iptables -L -n | grep 2123
```

□□□□□□□□□

□□□

- □□□□□□□□□□□□□
- □□□□□

□□□□□

```
□□ 65□□□□□□□□
  → PCRF □□□□
  → □□ HSS/SPR □□ IMSI

□□ 66□□□□□□□
  → IP □□□
  → □□: curl http://pgw:9090/metrics | grep address_registry_count
  → □□ IP □

□□ 72□□□□□□□□□□□□
  → PCRF □□□ PGW-U □□
  → □□ Gx □□
  → □□ PFCP □□
```

□□□TEID □□

□□□

- □□□□□□□□□□□
- □□□□

□□□

- TEID □□□□□□□□
- TEID □□□□□□

□□□□□

- □□ TEID □□□□
- □□ TEID □□□□□□□

□□□□

□□□□

1. □□□□□□□

    - □ S5/S8 □□□□□□ VLAN
    - □□□□□□□□□

2. **MTU** □□

    - □□ MTU □□ GTP □
    - □□ MTU□1500 □□□1464 □□□□□ + 36 GTP□

3. □□

    - □□ OmniPGW □□
    - □ SGW-C □□□□ DNS □□□□□□

□□

1. **UDP** □□□□□

    - □□□□□□□□□□□□□□□□
    - □□□□□□□□□□ 4-8 MB

2. □□□□

    - □□□□□□□□□□□□□□□□□□
    - □□ TEID □□□□□□

□□

1. **IP** □□

    - □□□□□□□□ SGW-C IP □ GTP-C
    - □□ iptables □□□ ACL

2. □□□□

    - OmniPGW □□□□□□□□
    - □���□□□□□ GTP-C □□□

□□□

□□□

- □□□ - S5/S8 □□□□□□□ IP □□
- □□□ - PDN □□□□□□□□□□
- **UE IP □□** - □□□□□□□□□□ IP □□
- **PCO □□** - GTP-C □□□□ PCO □□

□□□

- **Gn/Gp □□** - 2G/3G GGSN □□□ GTP-C v1
- **PFCP □□** - □ S5/S8 □□□□□□□□□
- **□□ Gx □□** - □□□□□□□□□
- **□□ Gy □□** - □□□□□□□□□

□□

- □□□ - S5/S8 GTP-C □□□□□□□
- **□□ CDR □□** - □ GTP-C □□□□ CDR

□□□□□□

OmniPGW S5/S8 □□ - *□ Omnitouch □□□□□□*

□□□□□□

PDN □□□□□□□□□□

OmniPGW □ Omnitouch □□□□□□

□□

□□ **PDN (□□□□□□□)** □□ □□ UE □□ OmniPGW □□□□□□□□□□□□□□□□□□□□□□□□□□□□□□□□

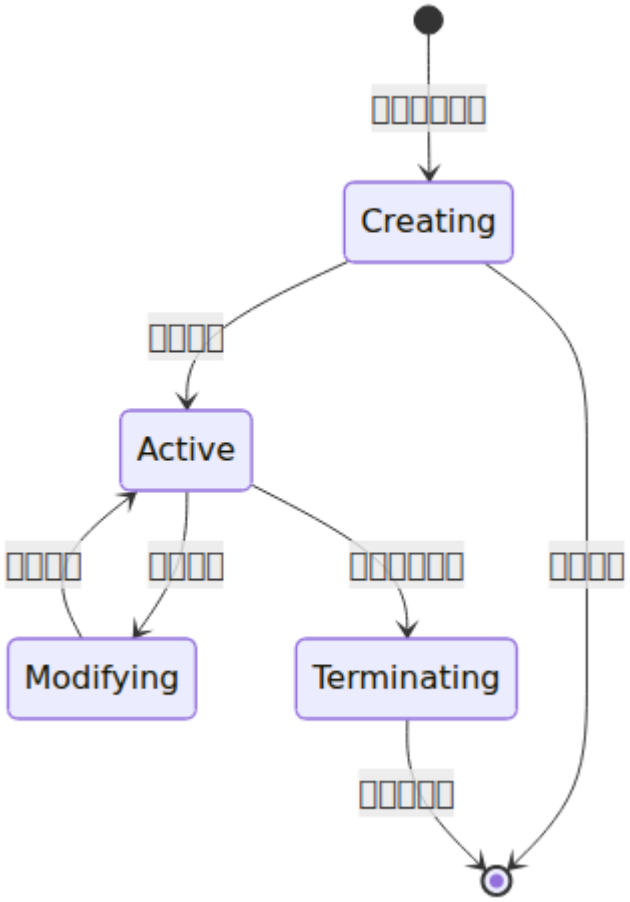

□□□□

□□□□□

□□□□□□□□□□□□□□□□□□□□□□

□□□	□□	□□
TEID	S5/S8 (GTP-C)	SGW-C □□□□□□□□ ID
SEID	Sxb (PFCP)	PGW-U □□□□□□□□ ID
Session-ID	Gx (Diameter)	PCRF □□□ Diameter □□
Charging-ID	□□	□□□□□□ ID

□□□□

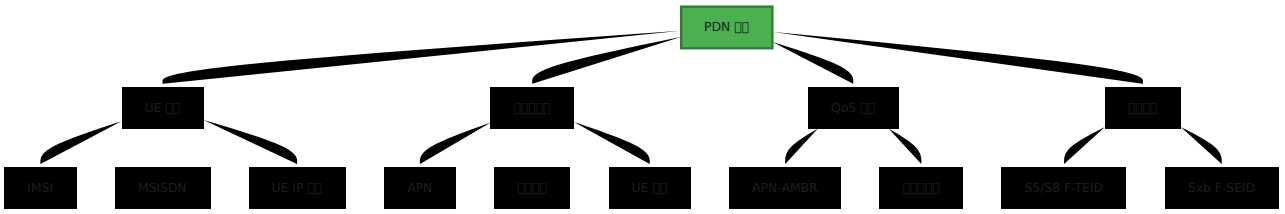

□□□□

□□□□

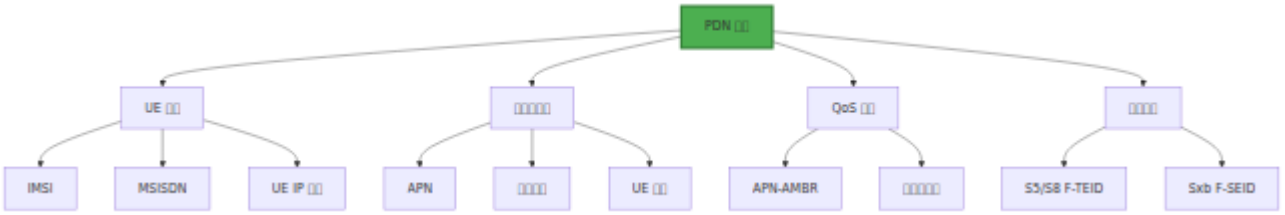

□□

1. □□□□□□□□□ (S5/S8)

□□□□□□□ S5/S8 □□□□ GTP-C □□□□□□□□□□□ GTP-C □□□□□□□□□□□□□ S5/S8 □□□

□□:

- IMSI, MSISDN, IMEI
- APN (□□□"internet")
- RAT □□ (EUTRAN)
- UE □□ (TAI, ECGI)
- □□□□□□ (QoS, F-TEID)

2. □□□□

```
- □ APN □□□□ UE IP
- □□□□□ ID
- □□ Gx □□-ID
- □□ S5/S8 TEID
- □□ PGW-U □□□
```

3. □□□□ (Gx)

□ PCRF □□□□□

- □□ CCR-□□
- □□□□ QoS □ PCC □□□ CCA-□□

4. □□□□□□ (PFCP)

□□□□□□□□ PGW-U□

- □□□□□□□□□
- □□ PDRs, FARs, QERs, BAR
- □□ S5/S8 □□□ F-TEID

5. □□ SGW-C

□□□□□□□□□□

- UE IP □□
- S5/S8 F-TEID (□□ PGW-U)
- PCO (DNS, P-CSCF, MTU)
- □□□□□

□□□

□□□

□□□□□□□□□□□□□□□□□□

- **QoS** □□ - PCRF □□□□□
- □□□□ - □□/□□□□□□
- □□ - SGW □□
- □□□□ - PCRF □□□□ PCC □□

QoS □□□□

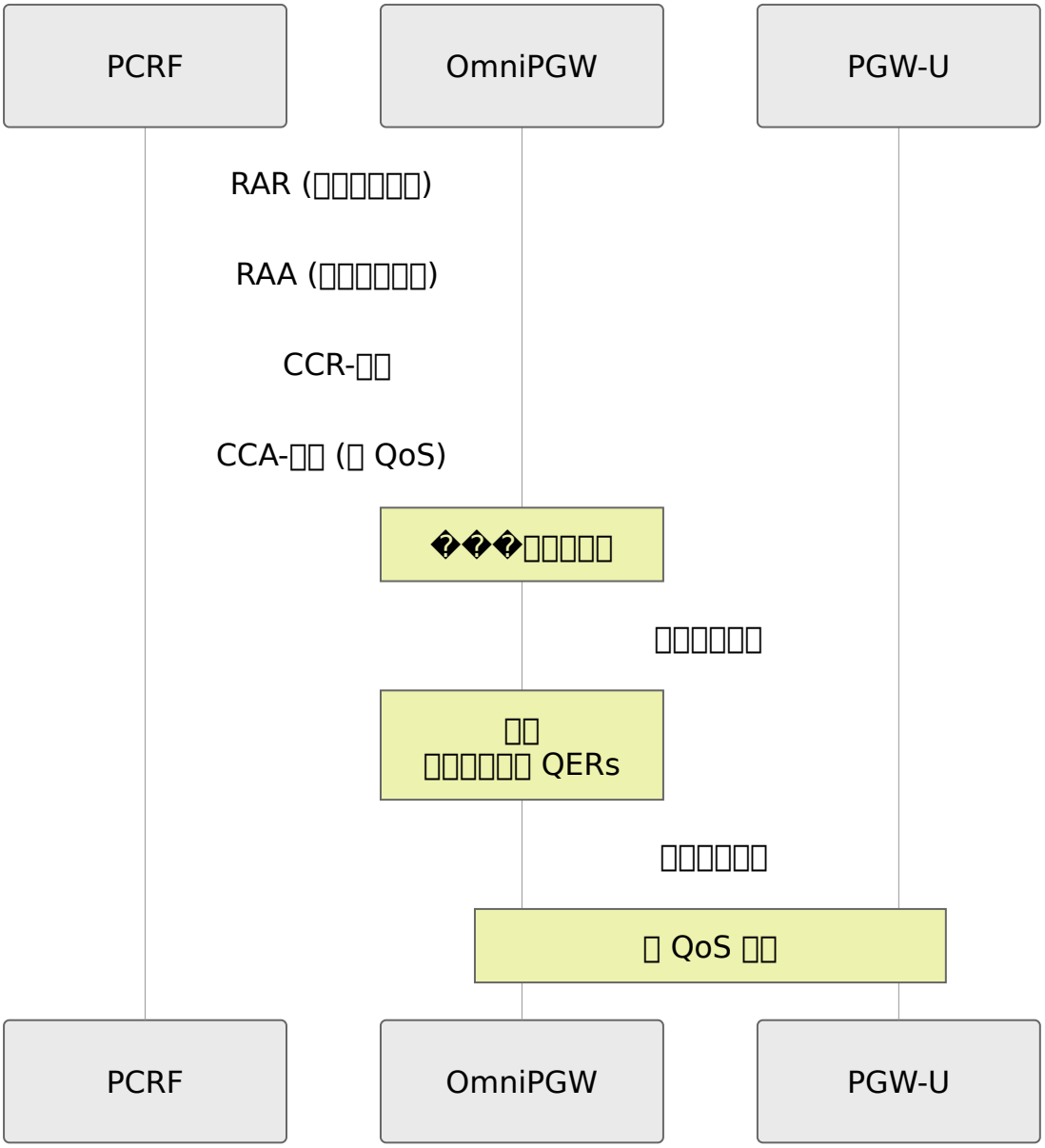
PCRF
OmniPGW
PGW-U
RAR (□□□□□□□)
RAA (□□□□□□□)
CCR-□□
CCA-□□ (□ QoS)
□□□□□□□□
□□
□□□□□□□ QERs
□□□□□□□□
□ QoS □□
PCRF
OmniPGW
PGW-U

□□□□

□□□□

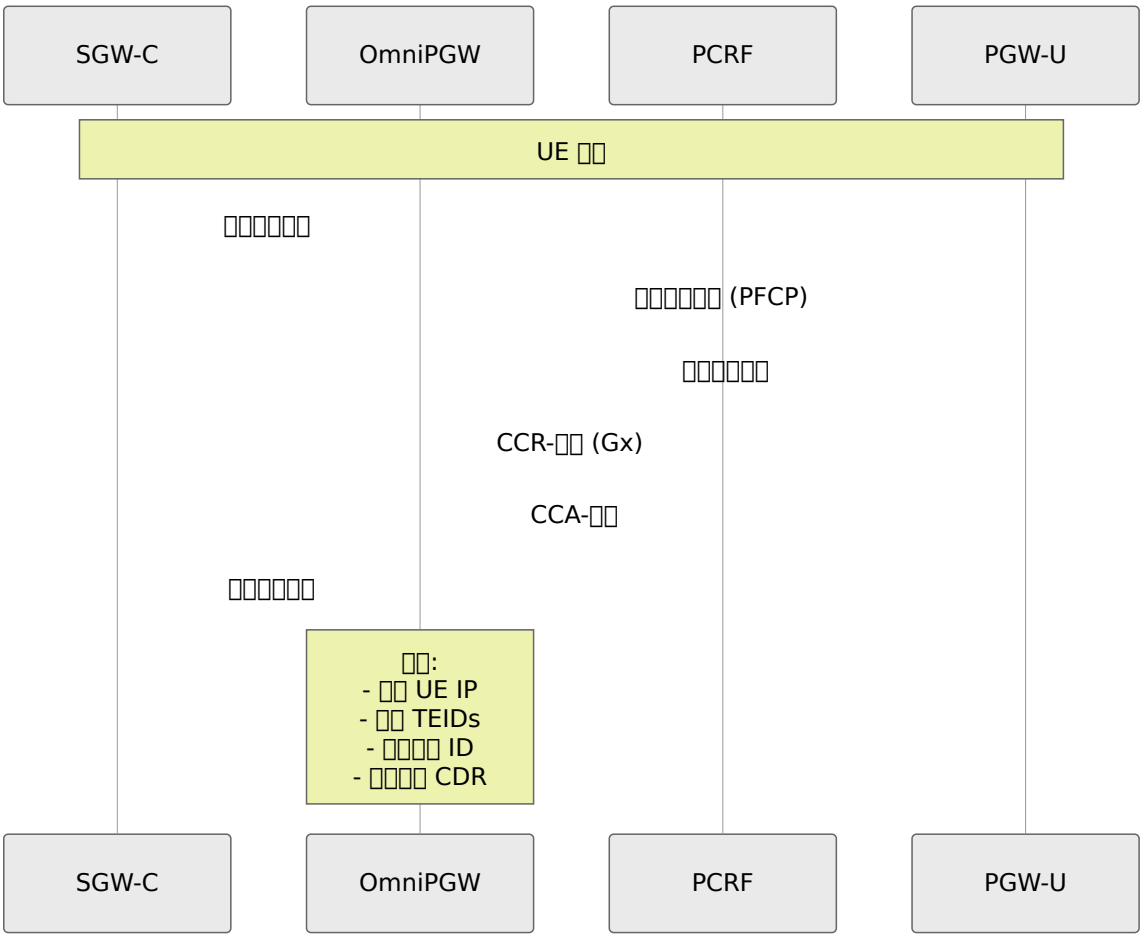

□□□□

□□□□□:

1. UE IP □□ → □□□□
2. TEID → □□□□□□□□
3. SEID → □□□□□□□□
4. □□-ID → □□□□□□□□
5. □□-ID → □□
6. □□□□□□□

□□□□□□□□:

- □□□□□□□□□□ CDR (□□□□□□□) - □□□ □□ CDR □□

□□□□

□□□

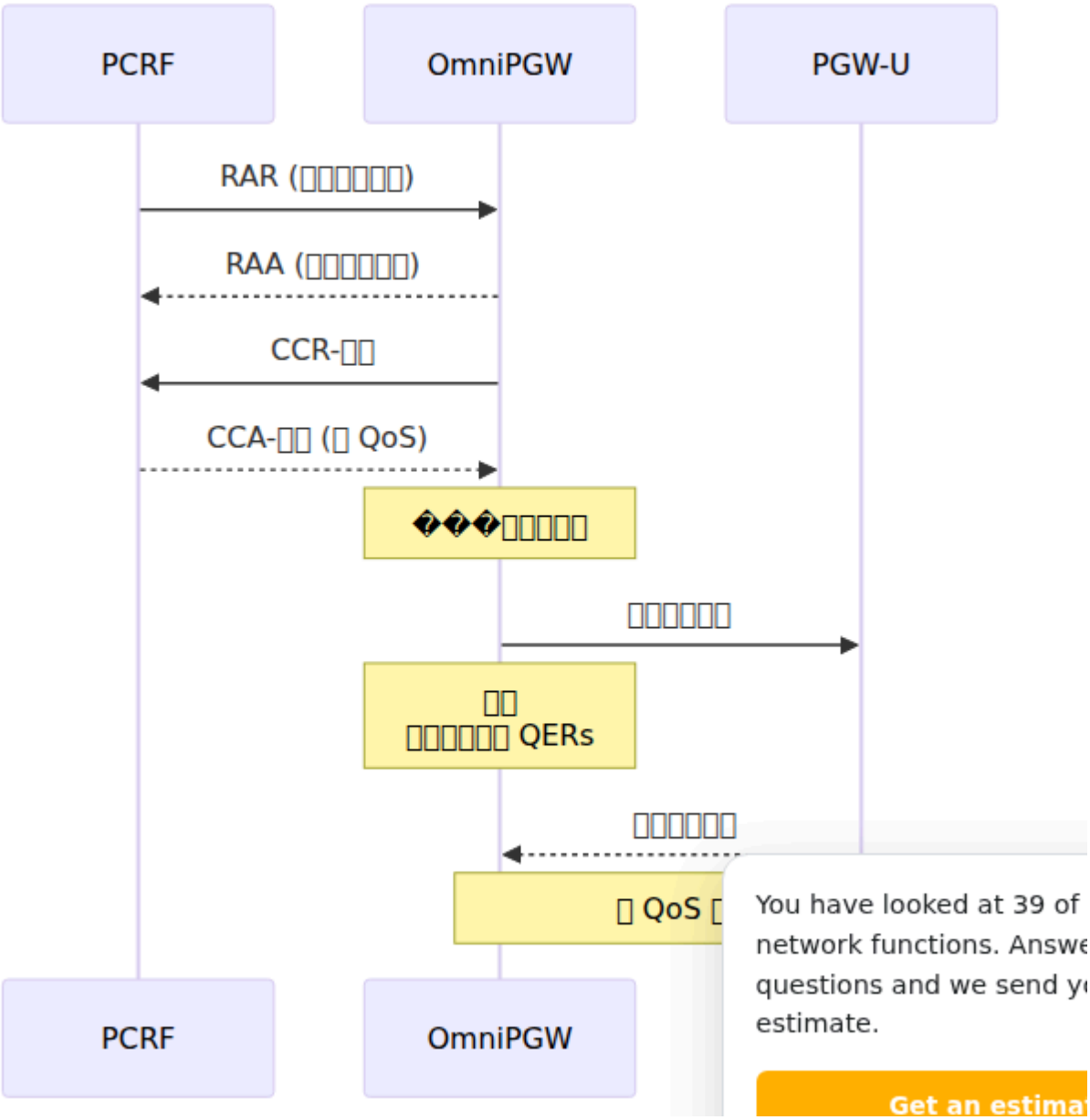
PCRF
OmniPGW
PGW-U
RAR (□□□□□□□)
RAA (□□□□□□□)
CCR-□□
CCA-□□ (□ QoS)
□□□□□□□
□□
□□□□□□□ QERs
□□□□□□□
□ QoS □
PCRF
OmniPGW
You have looked at 39 of
network functions. Answe
questions and we send y
estimate.
Get an estima

□□□□

□□□□□:

```
□ TEID (S5/S8):
  TEID 0x12345678 → □□ PID

□ SEID (Sxb):
  SEID 0xABCDEF → □□ PID

□ □□-ID (Gx):
  "pgw.example.com;123;456" → □□ PID

□ UE IP:
  100.64.1.42 → □□ PID

□ IMSI + EBI:
  "310260123456789" + EBI 5 → □□ PID
```

□□□□

□□□□□□

```
# □□□□□□
teid_registry_count

# PFCP □□
seid_registry_count

# Gx □□
session_id_registry_count
```

□□□□

```
# □□□□□□□
rate(s5s8_inbound_messages_total{message_type="create_session_request

# □□□□□□□
rate(s5s8_inbound_messages_total{message_type="delete_session_request

# □□□□□□□ (p95)
histogram_quantile(0.95,

rate(s5s8_inbound_handling_duration_bucket{request_message_type="crea
[5m])
)
```

□□□□

□□□□□□

□□:

1. **IP** □□□ - □□□□□□ IP
2. **PCRF** □□□□□ - Gx □□
3. **PGW-U** □□ - □□□□□□ PFCP □□□
4. **PCRF** □□ - □□□□□□□□□□

□□:

```
# □□ IP □
curl http://pgw:9090/metrics | grep address_registry_count

# □□ PCRF □□
# □□□□□□□ Gx □□

# □□ PGW-U □□
# □□ PFCP □□□□□
```

□□□□/□□

□□:

- □□□□□□□□
- □□□□□□
- □□□□□□□□□□□□□□

□□:

1. □□□□□□□□□□
2. □□□□□□□□□□
3. □□□□□□

□□□□:

```
# □□ OmniPGW (□□□□□□□)
# □□□□□□□□□□
```

UE □□□□□□

□□:

- UE □□□□
- □□□□□□□□□□□□□□

□□□□□□□□:

□□□	□□	□□
□□□□	PCRF □□ (IMSI □□□□□□)	□□□□
□□□□□	IP □□□	□□ IP □
□□□□□□□□	PCRF/PGW-U □□	□□□□
□□□□□	□□ APN	□□ APN □

□□□□

□□□□

□□□□□□□□□:

```
□□□□□□□□: 10,000
□□□□□□□□□: ~10KB RAM
□□□ RAM: ~100MB

Erlang VM □□:
  - □□□□□: 262,144 (□□)
  - □□□□□□: □□□□□□□
```

□□□□

□□□□□□□□□:

1. □□□□□□□□□□□□
2. □□□□□□□□□□□□□□□□
3. □□□□□□□□□□□□□

□□□□

□□□□□:

- □□□□□□□□ (□□□□□□□□□)
- □□□□□□□□□□□ HA (□□)
- DNS/□□□□□□□□□□□□

□□□□□□

□□□□□□□□□□

□□□□□ PDN □□□□□□□□□

UE □□:

- IMSI: "310260123456789" (□□□□)
- MSISDN: "14155551234" (□□□□)
- MEI/IMEI: □□□□□

PDN □□□□□□:

- APN: "internet" (□□□□)
- UE IP □□: 100.64.1.42 (□□□ IP)
- PDN □□: IPv4, IPv6, □ IPv4v6

□□□□□:

- □□ ID: □□□□□□□□
- □□□□ EBI: EPS □□□□□ (□□□ 5)

QoS □□:

- APN-AMBR: □□□□□□□
  - □□: 100 Mbps
  - □□: 50 Mbps

□□□□:

- PDRs (□□□□□□□): □□□□□
- FARs (□□□□□□): □□/□□□
- QERs (QoS □□□□): □□□□
- BAR (□□□□□□): □□□□

□□□□□:

- S5/S8 □□: □□/□□ TEIDs, SGW-C □□
- Sxb □□: □□/□□ SEIDs, PGW-U □□
- Gx □□: Diameter □□-ID, □□□□□

□□□□□□

OmniPGW □□□□ **OAM REST API** □□□□□□□□□□□□□□□□□□□□□□□□□□□□API □□ HTTPS/TLS □□ □ `8443` □□□□□□□□□□ `/api` □□□□

```
GET    /api/sessions                 # □□□□□□□
GET    /api/sessions?search=<imsi>   # □ IMSI / MSISDN / IP □□
GET    /api/sessions/<imsi>          # □□□□□□□□□□□□
PUT    /api/sessions/<imsi>          # □□□□□□□□□ (□□□□□)
DELETE /api/sessions/<imsi>          # □□□□ (□□□□□)
```

□□□ API □□ (Swagger UI) □□ `https://<omnipgw-ip>:8443/api/docs` □□□

```
# □□□□□□□□□
curl -k https://<omnipgw-ip>:8443/api/sessions

# □ IMSI, MSISDN □ IP □□□
curl -k "https://<omnipgw-ip>:8443/api/sessions?
search=310170123456789"
```

UE □□□□□□□

□□:

```
GET /api/sessions?search=<imsi|msisdn|ip>   # □□□□□□□
GET /api/sessions/<imsi>                    # □□□□□□□□□□□
```

`search` □□□□□□□□□□□

- **IMSI** (□□□"310170123456789")

- **MSISDN** (□□□□)
- **IP □□** (□□□"100.64.1.42")

```
# □□□□□□□□□□□□□
curl -k https://<omnipgw-ip>:8443/api/sessions/310170123456789
```

□□□□□□□□□□□□□□□□

a) □□□□

- □□□□□□□□□□
- IMSI, MSISDN, UE IP □□
- APN, RAT □□
- PGW TEID, SGW TEID

b) □□□□□□ □□□□□□□□□□□□

- **TAC** (□□□□□□) - UE □□□□□□□
- □□ **ID (ECI)** - E-UTRAN □□□□□
- **ECGI** - E-UTRAN □□□□□□□ (PLMN + ECI)
- **MCC/MNC** - □□□□□□ / □□□□□□

c) □□□□ □□□□□□□□ QoS □□□

□□□□:

- EBI (EPS □□□□□)
- QCI (QoS □□□□□)
- □□□□□□
- APN-AMBR (□□/□□)

□□□□ (□□□□):

- EBI, QCI, □□□□□□
- MBR UL/DL (□□□□□)
- GBR UL/DL (□□□□□)

d) □□□□□ (Gy □□)

- Gy □□ ID
- □□□□□, □□□□□
- □□□□□

e) □□□□□ (Gx □□)

- Gx □□ ID
- PCRF □/□□□□□
- CC □□□□□
- □□□□□□□□□ (□□□□□□□ PCC □□)

f) □□□□□

- □□□□□□□□□□ (□ □□□□□□□□□□□□)
- □□□□□/□□/□□□□□

□□:

- □□□□□□□□□□
- □□□□□□□□
- □□□□□□ IP □□
- □□□□□□□□

□□□□□□□

□□:

```
GET    /api/sessions                 # □□□□□□□ PDN □□
GET    /api/sessions?search=<term>   # □□□□□
PUT    /api/sessions/<imsi>          # □□□□□□□□□□
DELETE /api/sessions/<imsi>          # □□□□□
```

□□: □□□□□□□ PDN □□□□□□□□□□□□□□□□ `GET /api/sessions` □□□□□□□□□□□

```
# □□□□□□□□□□
curl -k https://<omnipgw-ip>:8443/api/sessions

# □ IMSI □□, UE IP, MSISDN □ APN □□
curl -k "https://<omnipgw-ip>:8443/api/sessions?search=100.64"

# □□□□□□□□□□□□
curl -k -X PUT    https://<omnipgw-
ip>:8443/api/sessions/310170123456789   # □□□□
curl -k -X DELETE https://<omnipgw-
ip>:8443/api/sessions/310170123456789   # □□
```

□□□□□□ (□□□□□□):

- **IMSI** - □□□□
- **UE IP** - □□□ IP □□
- **SGW TEID** - □□ SGW □ S5/S8 □□ ID
- **PGW TEID** - □□ OmniPGW □ S5/S8 □□ ID
- **APN** - □□□□

□□ (□□ `?search=`):

- IMSI (□□□"310260")
- UE IP □□ (□□□"100.64")
- MSISDN / □□□□
- APN □□

□□□□□□ (`GET /api/sessions/<imsi>`):

- □□□□□□□ (IMSI, MSISDN, IMEI)
- □□□□□ (RAT □□, □□□□ MCC/MNC)
- QoS □□ (AMBR □□/□□)
- □□□□□ (□□□□□□□□□□ TEIDs)
- □□□□□□□ ID
- □□□□□□□ (□□□□□□)

□□□□□□□□□□

OAM API □□□□□□□□□□□□□□□□/□□□□□□

```
GET /api/upf         # PFCP / UPF □□□□□□□□□
GET /api/diameter    # Diameter (Gx/Gy) □□□□□
```

```
# □□□□□□□□ Diameter □□□□□□
curl -k https://<omnipgw-ip>:8443/api/upf
curl -k https://<omnipgw-ip>:8443/api/diameter
```

□□:

- □□□□□□□ (UPF □□, PCRF/OCS □□)
- □□□□□□□□□□□□□□□□□□
- □□□□□□□□□

□□□□□□□□□□

□□:

```
GET /api/session_history[?type=&search=&page=&page_size=]
```

□□: □□□□□□□□□□□□□□□□

□□:

- `type` - □□□□□□□□ (□□□□□□□□, □□□□)
- `search` - □ IMSI, MSISDN, IP □□□ TEID □□
- `page`, `page_size` - □□□□□□

```
# □□□□□□□□□□□□□□□□
curl -k "https://<omnipgw-ip>:8443/api/session_history?
type=session_deleted&search=310170123456789&page=1&page_size=50"
```

□□□□□□□□:

- □□□□□□□
- □□□□□□□
- □□□□□
- □□□□□

□□:

- □□□□□□□□ (□□□□□□□□□□□)
- □□□□□□□
- □□□□□□□□
- □□□□□□□
- □□□□□□□□□□□□□

□□□□

□□□□□:

```
1. □□□□□□□□□□
2. GET /api/sessions?search=<imsi|msisdn> □□□□□
3. GET /api/sessions/<imsi> □□□□□□□□ UE □ IP □□
4. □□ QoS □□□□□□□□□□□□
5. □□□□□□□□□□□□□
```

□□□□□:

- □□ `GET /api/sessions` (□ `teid_registry_count` □□) □□□□□□□□□□
- □□□□□□□□□□
- □ APN □□□□□□□ (□□ `?search=<apn>`)

□□□□□:

- □□□□□□□□□□□□□□□□□□□□ `?search=`
- □□□□□□□□□□ (`GET /api/sessions/<imsi>`) □□ SSH/IEx
- □□ SGW □ PGW TEIDs □□□□□□□□□□
- □□□ PCRF □□□ AMBR □

- □□ `DELETE /api/sessions/<imsi>` □□□□□□□□

□□□□□□□□□:

- □□□□□□□□□□□ (□□□□□□□)
- □□ `?search=` □□□□□□□□
- □□□□□□□
- □□□□/□□□ (□□ HTTPS □ JSON) □□□□□

□□□

□□□□□□

- **PFCP □□** - □□□□□□□□□, PDRs, FARs, QERs, URRs
- **UE IP □□** - IP □□□□, APN □□□
- **PCO □□** - □□□ UE □ DNS, P-CSCF, MTU □□
- **□□□□** - UPF □□, □□□□□□

□□□□□

- **Diameter Gx □□** - PCRF □□□□, PCC □□, QoS □□
- **Diameter Gy □□** - OCS □□□□, □□□□
- **□□ CDR □□** - □□□□□□□□□

□□□□

- **S5/S8 □□** - GTP-C □□, SGW-C □□
- **QoS □□□□□** - □□ QoS □□

□□

- **□□□□** - □□□□, □□□□□□, □□
- **P-CSCF □□** - IMS □□□□

□□□□□□

OmniPGW □□□□ - *□ Omnitouch □□□□□□*

OmniPGW □□□□□□

□□□□□□□□□□□□

□ Omnitouch □□□□□□

□□

1. □□
2. □□□□□□
3. □□□□□□
4. PFCP / □□□□□□
5. Diameter (Gx/Gy) □□
6. IP □□□□
7. □□□□

□□

□□□□□□□□□□ OmniPGW □□□□□□□□□□□□□□□□□□□□□□□□

- □□□□□□□□□□□□
- □□□□□□□□□□□□
- □□□□□□□□□□
- □□□□□□□□□□
- □□□□□□□□□□□□

□□□□

- □□□□ - Prometheus □□□□□□□□□□
- □□□□ - □□□□□□

□□□□□□

OAM API

□□ **URL:** `https://<omnipgw_ip>:8443` (HTTPS/TLS□□□□□□ `/api` ��□□)

□□□ **API □□ (Swagger UI):** `https://<omnipgw_ip>:8443/api/docs`

□□□□□

- `GET /api/sessions[?search=<imsi|msisdn|ip>]`, `GET /api/sessions/<imsi>` - □□□□□□□□□ IMSI□IP□MSISDN □□□
- `GET /api/diameter[?status=connected|disconnected]`, `GET /api/diameter/<origin-host>` - Diameter □□□□ (Gx PCRF, Gy OCS)
- `GET /api/charging[?search=<imsi>]`, `GET /api/charging/<imsi>` - □□□□ (Gy) □□
- `GET /api/upf`, `GET /api/upf/<ip>` - UPF / PFCP □□□□ (PGW-U □□□)
- `GET /api/ip_pools`, `GET /api/ip_pools/<name>` - IP □□□□
- `GET /api/session_history[?type=&search=&page=&page_size=]` - □□□□
- `GET /api/status` - □□□□ (`{"result":"ok"}`)

□□□

```
curl -k https://<omnipgw_ip>:8443/api/sessions
```

□□□□□□□□□□□□□□□□□□□□ (`journalctl`/□□□□) □□□□□□□□

Prometheus □□

□□**:** `http://<omnipgw_ip>:9090/metrics`

□□□□□

- `teid_registry_count` - □□□□
- `address_registry_count` - □□□ UE IP
- `sxb_inbound_errors_total` - PFCP □□

- `gx_inbound_errors_total` - Diameter Gx □□
- `gy_inbound_errors_total` - Diameter Gy □□

□□□ □□□□ □□□□□□□□□□□□

□□□□□

□□□ □□□□□□□ (`journalctl -u omnipgw_c` □□□□□□□□) □ grep □□□□□□□□□□□□□□□□□□□□□□□□□□□□□□□□ `GET /api/session_history[?type=&search=&page=&page_size=]`□

□□□□□□□□□

- "create_session_request" - □□□□
- "Credit Control" - Gx/Gy □□
- "PFCP Session" - □□□□□□
- "error" □ "ERROR" - □□□□
- "timeout" - □□□□

□□□□□□

□□□□□□□□□□□□□□□□ "□□□□□□"

□□□

- SGW-C □□□□□□□□□□□□□ "□□□□□□" (73)
- □□□□□□□□□□
- □□□□□□□□
- □□□`[PGW-C] □□□□□□□□□ - □□□□□`

Wireshark □□□□□□□□□□□□□□□ "□□□□□□□"

□□□□□

- □□□□□□□ OmniPGW □□□
- □□□□□□□□□□□

□□□

1. □□□□□□□□□

   ```
   license_status
   ```

   - □□ 0 □□□□□□□□

2. □□□□□□□□□□□□□□

   - □□ "license" □ "License"
   - □□ "□□□□□□□□□□□□" □□

3. □□□□□□□□□□

   - □□ `config/runtime.exs` □ `:license_client` □□□□ URL
   - □□□`https://localhost:10443/api`

□□□□□

1. □□□□□□□□□□□□□□□□

   ```
   curl -k https://<license_server_ip>:10443/api/status
   ```

2. □□ **`config/runtime.exs`** □□□□□□□□□

   ```
   config :license_client,
     license_server_api_urls:
   ["https://<license_server_ip>:10443/api"],
     licensee: "□□□□□□□"
   ```

3. □□□□□□□□□□□□□□

   - □□□□□ `omnipgwc`
   - □□ Omnitouch □□□□□□□

4. □□□□□□□□ **OmniPGW**

□□□

- □□ `license_status` □□□□□□□□□
- □□□□□□□□□□□□□
- □□□□□□□□□□□□□□□□□

□□□□□□□□□□□□□□□□□□□

□□□

- SGW-C □□□□□□□□□□□□□□□□
- □□□□□□ PDN □□
- □□□ `s5s8_inbound_errors_total` □□

□□□□□

1. IP □□□
2. PCRF (Gx) □□□□□□□□□

3. PGW-U (PFCP) □□□
4. □□□ APN □□

□□□

1. □□ **IP** □□□□□

   ```
   address_registry_count
   ```

   - □□□□□□□□□□□□□□□□□□□□

2. □□ **PCRF** □□□□

   - □□ `GET /api/diameter` (□ `GET /api/diameter?status=disconnected`)
   - □□ PCRF □□□□ = "disconnected"
   - □□□□□ "Credit Control Answer" □□□□□

3. □□ **PFCP** □□□□□

   - □□ `GET /api/upf` (□ `GET /api/upf/<ip>` □□□□ PGW-U)
   - □□ "Association: DOWN"
   - □□□`pfcp_peer_associated` = 0

4. □□ **APN** □□□

   - □□ `config/runtime.exs` □□ `ue.apn_map`
   - □□□□□ APN □□□□□□□□

□□□□□

□□ **IP** □□□□

1. □□□□□□□□□□ `GET /api/sessions` (□□ `GET /api/sessions?search=<imsi|msisdn|ip>`)□□□□□□
2. □ `config/runtime.exs` □□□ IP □□

```
config :pgw_c,
  ue: %{
    subnet_map: %{
      "internet" => "10.0.0.0/23"  # □ /24 □□□ /23□□□□□□
    }
  }
```

3. □□ OmniPGW
4. □□□`curl http://<ip>:9090/metrics | grep address_registry_count`

□□ **PCRF □□□□□□**

1. □□□□□□□□`ping <pcrf_ip>`
2. □□ PCRF Diameter □□□`telnet <pcrf_ip> 3868`
3. □□ `config/runtime.exs` □□ Diameter □□□□
4. □□□□□□□□□ OmniPGW
5. □□ `GET /api/diameter?status=connected` □□□□□□□□ "connected"□

□□ **PFCP □□□**

- □□□ PFCP / □□□□□□ □□

□□□

- □□ IP □□□□□□□ 80% □□□□□
- □□ PCRF □□□□□□□ Diameter □□□□
- □□□□□□□□□

□□□□□□□□□□

□□□

- □□□□□ `GET /api/sessions` □□□□□□
- □□□□□□□□□□□□□□□□□□□
- □□□□□□□□□□□

□□□□□

1. PFCP □□□□□□□□□ S5/S8 □□□□□□
2. PCRF CCR-Initial □□
3. □□□□□□□□□□□□□□□□□□
4. □□□□□□□□□□□□□□

□□□

1. □□ **OAM API** □□□□□□
   - `GET /api/sessions/<imsi>` (□ `GET /api/sessions?search=<imsi>`)
   - □□ `pfcp_seid` □□□□□□□□□□□□□ PFCP □□□
   - □□ `gx_session_id` □□□□□□□□□□□□□ Gx □□□
2. □□□□□□□ **IMSI**□
   - □ IMSI □□□□
   - □□ "□□□□□□□"□PFCP□
   - □□ "□□□□□□□"□Gx□
   - □□□□□□□□□□
3. □□□□□

```
# □ TEID □□□ PFCP □□□□□
teid_registry_count - seid_registry_count

# □ TEID □□□ Gx □□□□□
teid_registry_count - session_id_registry_count
```

□□□□□

1. □□ **PFCP** □□□□□
   - □□ PGW-U □□□□□
   - □□ PFCP □□□`GET /api/upf`
   - □ SGW-C □□□□□□□□□□□□□□□
2. □□ **Gx** □□□□□

- □□ PCRF □□□`histogram_quantile(0.95, rate(gx_outbound_transaction_duration_bucket[5m]))`
- □□□□□□□ `config/runtime.exs` □□ Gx □□
- □□□□□□□□□□□□□□

3. □□□□□□□□□□□

- □□□□□□ OmniPGW □□□□□□□□
- □□□□□□□ `teid_registry_count` □□□□□

□□□

- □□ PFCP □ Gx □□□□
- □□□□□□□□□□□□□□□/□□
- □□□□□□□□□□□□□

PFCP / □□□□□

□□□PFCP □□□□

□□□

- `GET /api/upf` □□ "Association: DOWN"
- □□□□□□□□□□
- □□□`pfcp_peer_associated` = 0
- □□□"PFCP □□□□" □ "□□□□□□"

□□□□□

1. PGW-U □□□□□□□□□□
2. PGW-U □□□□□
3. PFCP □□□□□□IP□□□□
4. □□□□□ UDP 8805

□□□

1. □□□□□□□□□

```
ping <pgw_u_ip>
nc -u -v <pgw_u_ip> 8805
```

2. □□ **PFCP** □□□

   - □□ `config/runtime.exs` □□ `upf.peer_list`
   - □□ IP □□□□□ ID □□□ PGW-U □□□□

3. □□ **PGW-U** □□□

   - □□ PGW-U □□
   - □□ PGW-U □□□□□□□ `systemctl status omnipgw_u` □□□□□□□

4. □□□□□

```
# □□□□
pfcp_consecutive_heartbeat_failures

# PFCP □□□
rate(sxb_inbound_errors_total[5m])
```

□□□□□

1. □□□□□□□□

   - □□□□□ `traceroute <pgw_u_ip>`
   - □□□□□□□□□□□□□ UDP 8805
   - □□□□□□□□□□□□□□□

2. □□ **PGW-U** □□□

   - □□ PGW-U □□
   - □□ 30 □□□□□□□□
   - □□ `GET /api/upf` □□□□□□ "Association: UP"□

3. □□□□□□□

- □□ `config/runtime.exs` □□ PFCP □□□□
- □□ OmniPGW
- □□□□□□□□□

□□□

- □□ `pfcp_peer_associated` □□□□□□□□□□
- □□ `pfcp_consecutive_heartbeat_failures`□□ > 2 □□□□□□
- □□□□ PGW-U □□
- □□ PFCP □□□□/□□□□□□□□□□

□□□PFCP □□□□□□

□□□

- □□□□□□□□□
- QoS □□□□□□□□ PCRF RAR□□□
- □□□"□□□□□□□□□"
- □□□ `sxb_inbound_errors_total{message_type="session_modification_response"}` □□

□□□□□

1. □□□ PFCP □□□PDR/FAR/QER □□□
2. PGW-U □□□□
3. □□ ID □□
4. PGW-U □□□□

□□□

1. □□□□□

   - □□ "□□□□" □ SEID
   - □□ PFCP □□□□□□□□□□
   - □□□□□"□□ ID □□□"□"□□□□"

2. □□ **PGW-U** □□□

    - □□ PFCP □□□□
    - □□□□□□□□□CPU□□□□

3. □□ **OAM API** □□□□□□□

    - `GET /api/sessions/<imsi>` (□ `GET /api/sessions?search=<imsi>`)
    - □□ `pdr_map`□`far_map`□`qer_map` □□□□□□
    - □□□□□ ID

□□□□

1. □□□□□□□

    - □□□□□□□□□□□
    - □□□□□□□□□□□□□□ UE □□□

2. □□ **PGW-U** □□□□

    - □□ PGW-U □□□□□□PDR□□□□□
    - □□□□□□□ PGW-U
    - □□□□□ PGW-U □□□□□□□

3. □□□□□□□

    - □□□□□□□□ (`GET /api/sessions/<imsi>`)
    - □□ PFCP □□□□
    - □□□□□□□□□□□□□

□□

- □□ PGW-U □□□□
- □□□□□□□□□□□□□□□□□□
- □□ `sxb_inbound_errors_total` □□□□

Diameter (Gx/Gy) □□

□□□PCRF □□□□□Gx□

□□□

- `GET /api/diameter` (□ `GET /api/diameter?status=disconnected`) □□ PCRF □□ "disconnected"
- □□□□□□□ QoS □□□□□□□ QCI=5□
- □□□"Diameter □□□□□□" □ "CER/CEA □□"

□□□□□

1. PCRF □□□□□□□□□□
2. PCRF □□□□
3. Diameter □□□□□□Origin-Host□Realm□
4. □□□□□ TCP 3868

□□□

1. □□□□□□□□

   ```
   ping <pcrf_ip>
   telnet <pcrf_ip> 3868
   ```

2. □□ **Diameter** □□□

   - □□ `config/runtime.exs` □□ `diameter.peer_list`
   - □□ `host`□`realm`□`ip` □□□ PCRF □□□□
   - □□ `origin_host` □□□ PCRF □□□□

3. □□ **PCRF** □□□

   - □□□□ PGW-C □ CER□□□□□□□□
   - □□□□□□

4. □□□□□

```
# Diameter □□□□
diameter_peer_connected{peer="<pcrf_host>"}
```

□□□□□

1. □□□□□□□□
   - □□□ PCRF □□□
   - □□□□□□□□□□□□□ TCP 3868
   - □□□□□□□`nc -v <pcrf_ip> 3868`
2. □□ **PCRF** □□□□□
   - □□ PCRF □□
   - □□□□□□□□□30 □□□□□□
   - □□ `GET /api/diameter?status=connected` □□
3. □□□□□□□□
   - □□ `config/runtime.exs` Diameter □□□

     ```
     config :pgw_c,
       diameter: %{
         host: "pgw-c.epc.mnc999.mcc999.3gppnetwork.org",  # □□□ PCRF □□□□
         realm: "epc.mnc999.mcc999.3gppnetwork.org",
         peer_list: [
           %{
             host: "pcrf.epc.mnc999.mcc999.3gppnetwork.org",
             realm: "epc.mnc999.mcc999.3gppnetwork.org",
             ip: "192.168.1.100",
             initiate_connection: true
           }
         ]
       }
     ```

   - □□ OmniPGW
   - □□□□□□□□

□□□

- □□ Diameter □□□□□□□□□□□□□□
- □□□□ PCRF □□□□□□□□□
- □□□□□□□□□ Diameter □□

□□□CCR/CCA □□□Gx □□□□□

□□□

- □□□□□□□□> 5 □□
- □□□"□□□□□□□□□"
- □□□`gx_outbound_transaction_duration` □□□□> 5s□
- □□□□□□□□□□ QoS□□□□□□

□□□□□

1. PCRF □□
2. PCRF □□□□□
3. □□□□
4. PCRF □□□□

□□□

1. □□ **Gx** □□□

```
# P95 □□
histogram_quantile(0.95,
rate(gx_outbound_transaction_duration_bucket[5m]))

# P99 □□□□□□□
histogram_quantile(0.99,
rate(gx_outbound_transaction_duration_bucket[5m]))
```

2. □□ **PCRF** □□□

   - □□ PCRF □□□□□
   - □□ CPU□□□□□□□□□
   - □□ PCRF □□□□□□□□

3. □□□□□□□□

```
ping -c 100 <pcrf_ip> | tail -1  # □□□□□□□
```

4. □□□□□

   - □□ CCR/CCA □□□□□□□□ "□□□□□"
   - □□ "□□ CCR" □ "□□ CCA" □□□□□

□□□□□

1. □□ **PCRF** □□□

   - □□ PCRF□□□□□□
   - □□□□□□□□ CCR □□□□
   - □□ PCRF □□□/□□□□

2. □□□□□□□□

   - □□□□□□□□□□□□□□□□□□□
   - □□□ PGW-C □ PCRF □□□□

3. □□□□□□□□□□□□□□□

   - □□ `config/runtime.exs`□

     ```
     config :pgw_c,
       diameter: %{
         transaction_timeout_ms: 10000  # □□□ 5000 □□
       }
     ```

   - □□ OmniPGW
   - □□□ □□□□□□□□□□□□□□□□□

□□□

- □□ Gx □□□□□□□□□□□ > 1s□□□ > 5s□
- □□□□□□□□□□ PCRF □□□□
- □□□□□□ PCRF □□

□□□OCS □□□□□□Gy□

□□□

- `GET /api/diameter` (□ `GET /api/diameter?status=disconnected`) □□ OCS □□ "disconnected"□`GET /api/charging` □□□□□□ (Gy) □□
- □□□□□□□□□□□□□□□□
- □□□"Gy □□□□□□□"

□□□□□□□□□

□□□ PCRF □□□□□□□□□ Gy □□□

□□□□□□

- □□□□□□□ TCP 3868□□ Gx □□□
- □□
- □□□□□□ `diameter.peer_list` □□ OCS □□

□□□ Diameter Gy □□ □□□ Gy □□□□□□□□

IP □□□□

□□□IP □□□

□□□

- □□□□□□□□□□□□□□□ "□□□□□□□"
- □□□`address_registry_count` □□□□□□□□□
- `GET /api/sessions` □□□□□□□□□□`GET /api/ip_pools` □□□□□□
- □□□"IP □□□□□□□□□"

□□□□□□

1. □□□□□□□□□

2. □□□□□□ IP□□□□□□□□□
3. □□□□□□□□□□□□
4. IP □□□□

□□□

1. □□□□□□□□

```
# □□ /24 □□□254 □ IP□
(address_registry_count / 254) * 100
```

2. □□□□□□□□□□

   - □□ `config/runtime.exs` □□ `ue.subnet_map`
   - □□□"10.0.0.0/24" = 254 □□ IP

3. □□□□□□□□ **IP** □□□

```
# □□□□□
teid_registry_count
address_registry_count
```

4. □□□□□□□□

   - `GET /api/sessions`□□ `GET /api/ip_pools/<name>` □□□□□□□□□□
   - □□□□□□□□□□
   - □□□□□□□□□□□□□□□□

□□□□□

□□□□□□□□□

1. □□ `config/runtime.exs`□□□ APN □□□□ □□ □ CIDR □□□□□

```
config :pgw_c,
  ue: %{
    subnet_map: %{
      "internet" => ["10.0.0.0/22"]  # 1022 □ IP□□□□ /24 = 254
□ IP□
    }
  }
```

2. □□ OmniPGW
3. □□□□□□□□□□□□

□□□□□□□

1. □□ `GET /api/sessions` □□□□□□
2. □ SGW-C □□□□□□□□□□
3. □ PCRF/SGW □□□□□□□□□
4. □□ `address_registry_count` □□□□□□□□□□□

□□□

- □□ IP □□□□□□□□□□
  - □□□> 70%
  - □□□> 85%
- □□□□□□□□□
- □□□□□□□□
- □□□□□□

□□□□□□□□ IP □□

□□□

- UE □□ IP □□□□
- □□□"IP □□□" □□
- □ `GET /api/sessions` □□□□□□□□□□□ IP □□

□□□□□

1. □□□□□□□□□
2. □□□□□□□□□□□
3. □□□□□□□

□□□

1. □□ **OAM API** □□ **IP**□
   - `GET /api/sessions?search=<ip>`
   - □□□□□□□ IMSI □□□□□□ IP
2. □□□□□□
   - □□ IP □□
   - □□ "IP □□" □□

□□□□□□

1. □□□□□□□□□□□
   - □□□□□ IMSI □□□ IP
2. □□□□□□□□□
   - □ SGW-C □□□□□□□□□□□□□□□□□□□□ IMSI
   - □□□□□□□□□□□
3. **UE** □□□□□□
   - UE □□□□□□□□
   - □□□□□□□□ IP
4. □□□□□□□□
   - □□ OmniPGW □□□□ IP □□□
   - □□□□□□□□□□□□□□□□□□□

□□□

- □□□□□□□□□□□□□□□□□□□□
- □□□□□□□□□□□□□□□□□□□□□□□

□□□□□□□ IPv6 □□ APN □□ IPv4v6 □□

□□□

- UE □□ **IPv4v6** PDN□□□□□ APN □□ `ue.subnet_map` □□□□ IPv4 CIDR
- □□ □□ **(SOS)** APN □ **IPv4-only** □□□□□PAA □□□ IPv6□□□□□□□□ "□□ APN □□ IPv6 □...□□□ IPv4-only"
- □□ □□ APN □□ □□□□□□□□□□ "APN □□ IPv6 □...□□□ IPv4v6 □□"

□□□□□

1. APN □□□□ IPv6 □□□□ IPv4-only □□□□□□
2. APN □ `ue.subnet_map` □□□□□□ IPv6 CIDR

□□□

- IPv6 □□□□□□□ IPv6 □□□□□□□□□□□□□□
- □□ (SOS) APN□□□□□ `"sos"`□□□□ IPv4-only — □□ IPv4 □□□□□ IPv6□PDN □□□□□ IPv4□□□ P-CSCF □□ PCO □□□□□□□□ IMS □□□□□
- □□ APN □□□□□□□□□□□□□□□□□□□□□□/□□□□□

□□□□□

1. □□ APN □□□□□□□□□ `ue.subnet_map` □□□□□ IPv6 CIDR □□□ OmniPGW□
2. □□ IPv4-only □□□□□□□□□□ IPv4-only □□□□ SOS APN□□□□□□□□□□□□

□□□ APN □□ IPv6 □□□ IPv4v6 □□ □ UE IP □□ → □□ 4□

□□□□

□□ Prometheus □□

```
# □□□□□
teid_registry_count

# □□□□□□□□□□□□
rate(s5s8_inbound_messages_total{message_type="create_session_request

# IP □□□□□□□□ /24 □□□
(address_registry_count / 254) * 100

# P95 □□□□□□□
histogram_quantile(0.95,
rate(s5s8_inbound_handling_duration_bucket{request_message_type="crea
[5m]))

# □□□
rate(s5s8_inbound_errors_total[5m])

# PCRF □□
histogram_quantile(0.95, rate(gx_outbound_transaction_duration_bucket

# PFCP □□□□
pfcp_peer_associated
```

□□□□□□□

□□□□□□ grep □□□□□ (`journalctl -u omnipgw_c` □□□□□□□□□)□□□□□□□□□□□□□`GET /api/session_history[?type=&search=]` □□□□□□□□□□□□□□□□

□□□	□□
IMSI	□□□□□□□□□□□□□
"create_session"	□□□□□□□
"delete_session"	□□□□□□□
"Credit Control"	Gx PCRF □□
"PFCP Session"	□□□□□□□
"error"	□□□□□□□
"timeout"	□□□□
"Association"	PFCP □□□□

□□□□□□□

```
# □□□□□□□□
systemctl status omnipgw_c

# □□ OAM API □□□HTTPS/TLS□
curl -k https://<omnipgw_ip>:8443/api/status

# □□□□□□□
curl http://<omnipgw_ip>:9090/metrics

# □□□□□□□
curl http://<omnipgw_ip>:9090/metrics | grep teid_registry_count

# □□ PFCP □□
curl http://<omnipgw_ip>:9090/metrics | grep pfcp_peer_associated

# □□ IP □□□□□
curl http://<omnipgw_ip>:9090/metrics | grep
address_registry_count
```

□□□□

- □□□□ - Prometheus □□□Grafana □□□□□□
- □□□□ - □□□□□□
- □□□□ - □□□□□□□□□□
- **PFCP □□** - PFCP □□□□□□□□
- **Diameter Gx □□** - Gx □□□□□□
- **Diameter Gy □□** - Gy □□□□□□
- **QoS □□□□□** - □ QoS □□□□□

□□□□□□

OmniPGW □□□□□□ - *□ Omnitouch □□□□□*

UE IP□□□□□

□□□□□**IP**□□□□

□□

1. □□
2. IP□□□□
3. □□
4. □□□□
5. □□□□
6. □□
7. □□□□

□□

PGW-C□UE□□□□□□□□□PDN□□□□□□□□□□□□□□□IP□□□□□□□□□□□□□□□

□□□IP□□□□□

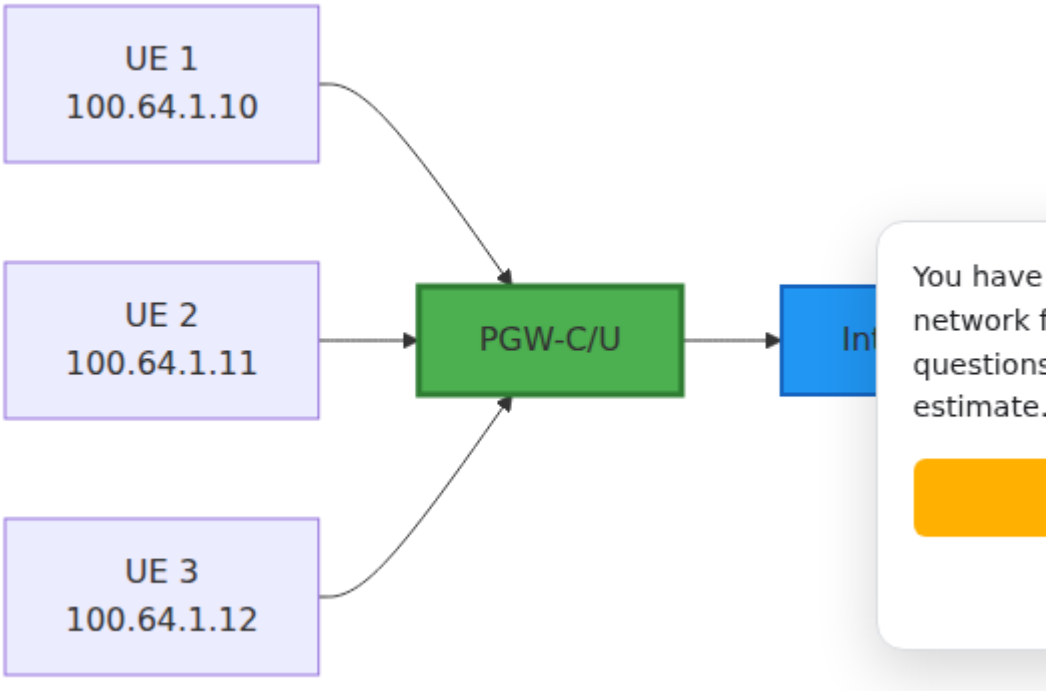

□□UE□PGW-C□□□□□□□□**IP**□□□□□□□

- □□□□□□□□
- □□□□□□□
- □□□□□□□□□
- □PDN□□□□□□□

□□□IP□□

IP□□	□□	□□
IPv4	□ □□	□□IPv4□□
IPv6	□ □□	IPv6□□□□□
IPv4v6	□ □□	□□□IPv4□IPv6□

IP□□□□

PDN□□

□UE□□PDN□□□□□□□□□□□**PDN**□□□

PDN□□	□□	□□□□□
IPv4	□IPv4□□	□□IPv4□□
IPv6	□IPv6□□	IPv6□□□□□□/64□
IPv4v6	□□□□	IPv4□□□IPv6□□

□□□□

PGW-C□□□□IP□□□□□

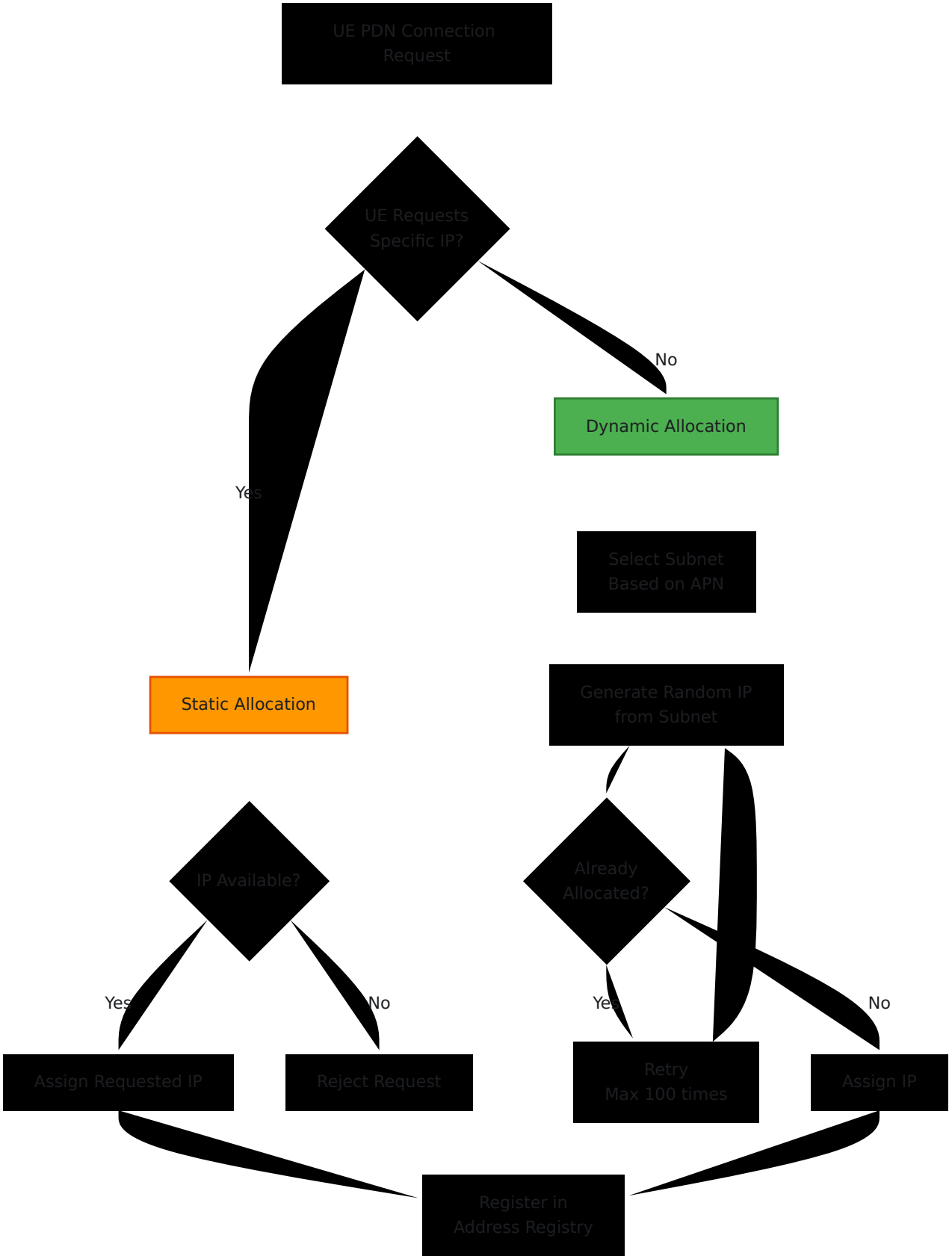
UE PDN Connection Request
UE Requests Specific IP?
No
Dynamic Allocation
Yes
Select Subnet Based on APN
Static Allocation
Generate Random IP from Subnet
IP Available?
Already Allocated?
Yes
No
Yes
No
Assign Requested IP
Reject Request
Retry Max 100 times
Assign IP
Register in Address Registry

1. □□□□□□□□□□□

- PGW-C□□□□□□□□□IP
- □□□□□□□□□□□□

- □□□□□□□□□□

2. □□□□□

- UE□GTP-C□□□□□□□□IP
- PGW-C□□□□□
- □□□□□□IP□□□□□□□□

□□APN□□□□□

□□□**APN□□□□□□□**□□□□□□□IP□□

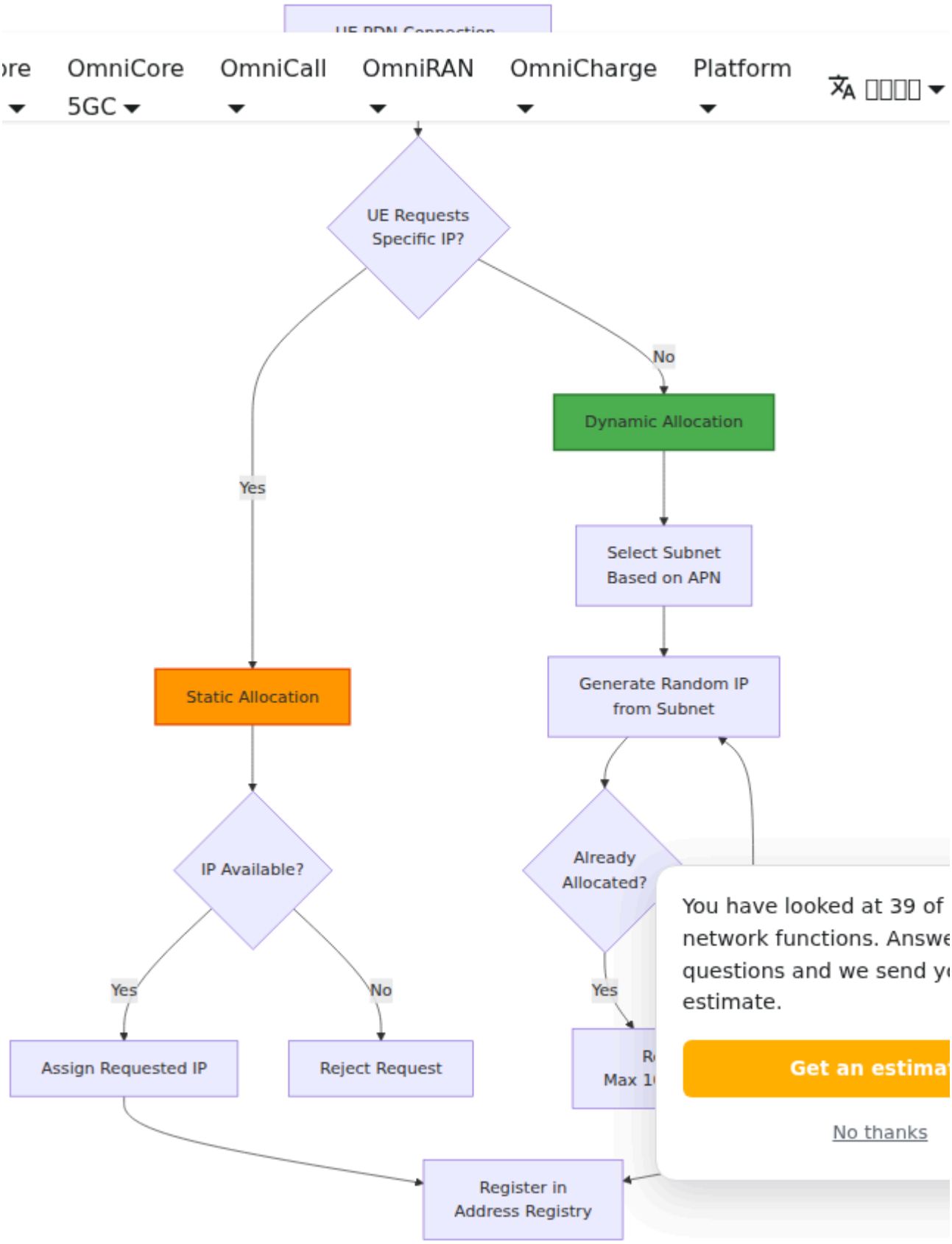
OmniCore 5GC
OmniCall
OmniRAN
OmniCharge
Platform
UE Requests Specific IP?
Yes
No
Static Allocation
Dynamic Allocation
Select Subnet Based on APN
Generate Random IP from Subnet
IP Available?
Already Allocated?
Yes
No
Yes
Assign Requested IP
Reject Request
Register in Address Registry
You have looked at 39 of
network functions. Answe
questions and we send y
estimate.
Get an estima
No thanks

□□□

- □□□□ - □□APN□□□□□□□
- □□□□□ - □□APN□□□□□□□

- □□□□ - □□□□□□□□□□□□□□□□
- □□ - □□□□□□□□□□□□

□□□□□

□□□□□□□□□□□□IP□

□□	□□
□□	□□UE IP → □□□□PID
□□	□□UE IP□□□□
□□	□□□□□□□IP
□□□□	□□□□□□

□□

□□□□

□□`config/runtime.exs`□

```
config :pgw_c,
  ue: %{
    subnet_map: %{
      # APN "internet"□□□□□□
      "internet" => [
        "100.64.1.0/24",    # 254□□□IP
        "100.64.2.0/24"     # 254□□□IP
      ],

      # APN "ims"□□□□□□
      "ims" => [
        "100.64.10.0/24"
      ],

      # □□APN□□□□
      default: [
        "42.42.42.0/24"
      ]
    }
  }
```

APN□□□□□□□□□□

□□□□APN□□□□□□□□□□□□□□□□□□□□□□□□□□□□□□□□□APN□□□□□□□□□□APN□□□□□□□

□□□□□

- □`^`□□□□□□□□□□□□□□□□
- □□`^`□□□□□□□□□□□□□□□□
- □□□□□□□□ - □□□□□□□□□
- □□□□□□□□□□□□□□□□`default`

```
config :pgw_c,
  ue: %{
    subnet_map: %{
      # □□□□□□□□"ims"□□□APN□□
□□"ims"□"ims.apn"□"ims.something.else"□
      "^ims" => [
        "100.64.10.0/24"
      ],

      # □□□□□□□□"m2m."□□□APN□□□□"m2m.test"□"m2m.prod"□
      "^m2m\." => [
        "100.64.20.0/24"
      ],

      # □□□□□ - "enterprise.corp"□□□□
      "enterprise.corp" => [
        "10.100.0.0/16"
      ],

      # □□□APN□□□□
      default: [
        "42.42.42.0/24"
      ]
    }
  }
```

□□□□□

- □□□□□□□□□□□□Elixir/Erlang□□□□□□□
- □Elixir□□□□□□□□□□□□□□□□□\□□\□
- □□□^□□□□□□□□□□□□□□□□□
- □□□□□□□□□□□□□□□□□□□□□□□□□□□□□
- □□□□□□□□□□□□□□□ - □□□□□□□□□□□□

□□□□□□□

□□□□	□□□	□□
□...□□	`"^ims"`	`ims`□`ims.apn`□`ims.anything`
□...□□	`"^.*\.corp$"`	`foo.corp`□`bar.corp`
□□	`"^.*test.*"`	`test`□`foo.test.bar`□`testing`
□□□□□□	`"^internet\.apn$"`	□`internet.apn`

□□□□□□□

□□□□□□□□□□□`.corp`□□□□APN□□□□`^.*\.suffix$`□

```
subnet_map: %{
  # □□□".corp"□□□APN
  "^.*\.corp$" => ["10.100.0.0/16"],

  # □□□".iot"□□□APN
  "^.*\.iot$" => ["10.200.0.0/16"],

  default: ["42.42.42.0/24"]
}
```

□□□□□□□

APN□□	□□□□	□□□□
`ims`	`^ims`	100.64.10.0/24
`ims.apn`	`^ims`	100.64.10.0/24
`ims.something.else`	`^ims`	100.64.10.0/24
`m2m.test`	`^m2m\.`	100.64.20.0/24
`m2m`	*default*	42.42.42.0/24
`enterprise.corp`	`enterprise.corp`	10.100.0.0/16
`foo.corp`	`^.*\.corp$`	10.100.0.0/16
`unknown.apn`	*default*	42.42.42.0/24

□□□□□

CIDR□□□□ `<network>/<prefix_length>`

CIDR	□□IP	□□□□
/24	254	100.64.1.1 - 100.64.1.254
/23	510	100.64.0.1 - 100.64.1.254
/22	1022	100.64.0.1 - 100.64.3.254
/20	4094	100.64.0.1 - 100.64.15.254
/16	65534	100.64.0.1 - 100.64.255.254

□□□

- □□□□□□□□□100.64.1.0□□□□□
- □□□□□□□□□100.64.1.255□□□□□
- PGW-C□`<network> + 1`□`<broadcast> - 1`□□□□

□□APN□□□□

□□□□□□□□□

```
config :pgw_c,
  ue: %{
    subnet_map: %{
      "internet" => [
        "100.64.1.0/24",
        "100.64.2.0/24",
        "100.64.3.0/24",
        "100.64.4.0/24"
      ]
    }
  }
```

□□□□□

- PGW-C□□□□□□□□□□□□□□□□
- □□□□□□□□□□
- □□□□□□□□□□□□□□□

□□□

- □□□□□□□□□□□□□
- □□□□□□□□□□□□□□□□□□
- □□□□□□□□□

□□□□□□

```
config :pgw_c,
  ue: %{
    subnet_map: %{
      # □□□□□□□□
      "internet" => [
        "100.64.0.0/20"     # 4094□IP□□□□□
      ],

      # IMS□LTE□□□
      "ims" => [
        "100.64.16.0/22"    # 1022□IMS IP
      ],

      # □□APN
      "enterprise.corp" => [
        "10.100.0.0/16"     # 65534□□□IP
      ],

      # IoT□□□□□□□□
      "iot.m2m" => [
        "100.64.20.0/22"    # 1022□IoT IP
      ],

      # □□□□
      default: [
        "42.42.42.0/24"     # 254□□□APN□IP
      ]
    }
  }
```

IPv6□□

```
config :pgw_c,
  ue: %{
    subnet_map: %{
      "internet" => [
        # IPv4□
        "100.64.1.0/24"
      ],
      "internet.ipv6" => [
        # IPv6□□□□□□□□
        "2001:db8:1::/48"
      ],
      default: [
        "42.42.42.0/24"
      ]
    }
  }
```

IPv6□□□□□

- UE□□□□□□/64□□
- □□UE□□□□IP□□□□□□□□□□□□□
- □□□UE□□`2001:db8:1:a::/64`

□□□IPv4v6□□□

```
config :pgw_c,
  ue: %{
    subnet_map: %{
      "internet" => [
        "100.64.1.0/24",        # IPv4□
        "2001:db8:1::/48"       # IPv6□□□□□IPv6□□□
      ]
    }
  }
```

□□□□□

- UE□□PDN□□□IPv4v6
- PGW-C□□□□IPv4□□□IPv6□□
- □□□□□□□□□

□□□□

IP□□□□□□□□□□□□□□□PGW-C□□S5/S8□□□□□□□□□□□□□□□□□□GTP-C□□□□□□□□□□□□ S5/S8□□□□□□□□□□□□□□□□□□□□□□□□

□□□□□IPv4□□

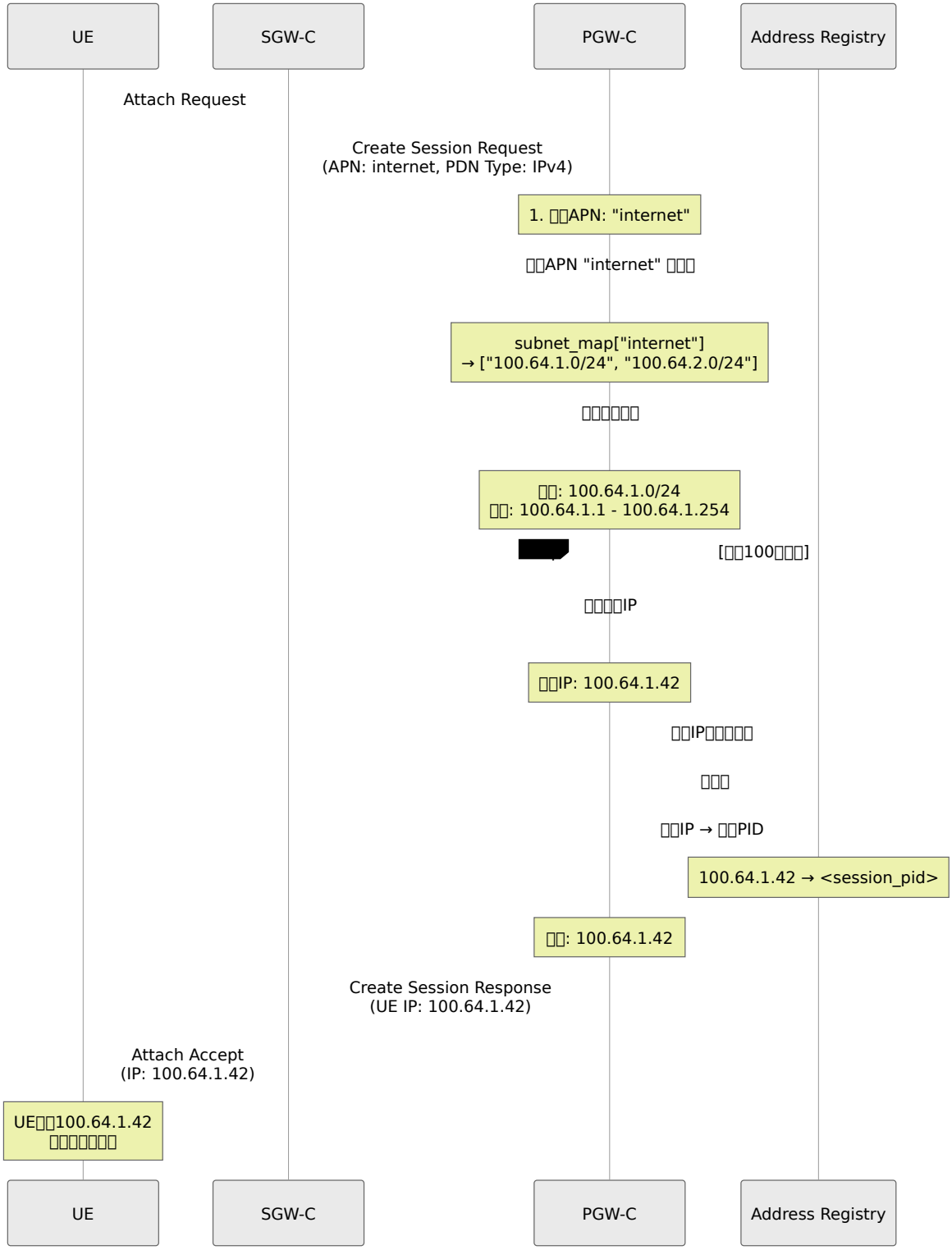
UE
SGW-C
PGW-C
Address Registry
Attach Request
Create Session Request
(APN: internet, PDN Type: IPv4)
1. □□APN: "internet"
□□APN "internet" □□□
subnet_map["internet"]
→ ["100.64.1.0/24", "100.64.2.0/24"]
□□□□□□□
□□: 100.64.1.0/24
□□: 100.64.1.1 - 100.64.1.254
[□□100□□□]
□□□□IP
□□IP: 100.64.1.42
□□IP□□□□□
□□□
□□IP → □□PID
100.64.1.42 → <session_pid>
□□: 100.64.1.42
Create Session Response
(UE IP: 100.64.1.42)
Attach Accept
(IP: 100.64.1.42)
UE□□100.64.1.42
□□□□□□□□
UE
SGW-C
PGW-C
Address Registry

□□□□

□□□□□□□□

1. □□□□□ □□□□□□□APN□□□□□
2. □□□□□ □□□□□□□□□□□□□□□
3. **IP**□□□ □□□□□□□□□□□□IP
4. □□□□□□ □□□□IP□□□□□□
5. □□□□□ □□□□□□□□□□□□100□□□□□□□IP
6. □□□ □□□□□□IP□□□□□□□□□

□□□□□

- □□**100**□□□ □□□□□□□□□□□□□□□
- □□□□□ □□□□□□IP□□□□□□□□□
- □□□□□ □□□□□□□□□□□□□□□□
- □□□□□□ □□□□□□□□□APN□□□□□□

□□□

□□□ □□□□□□□□□□□□□IP

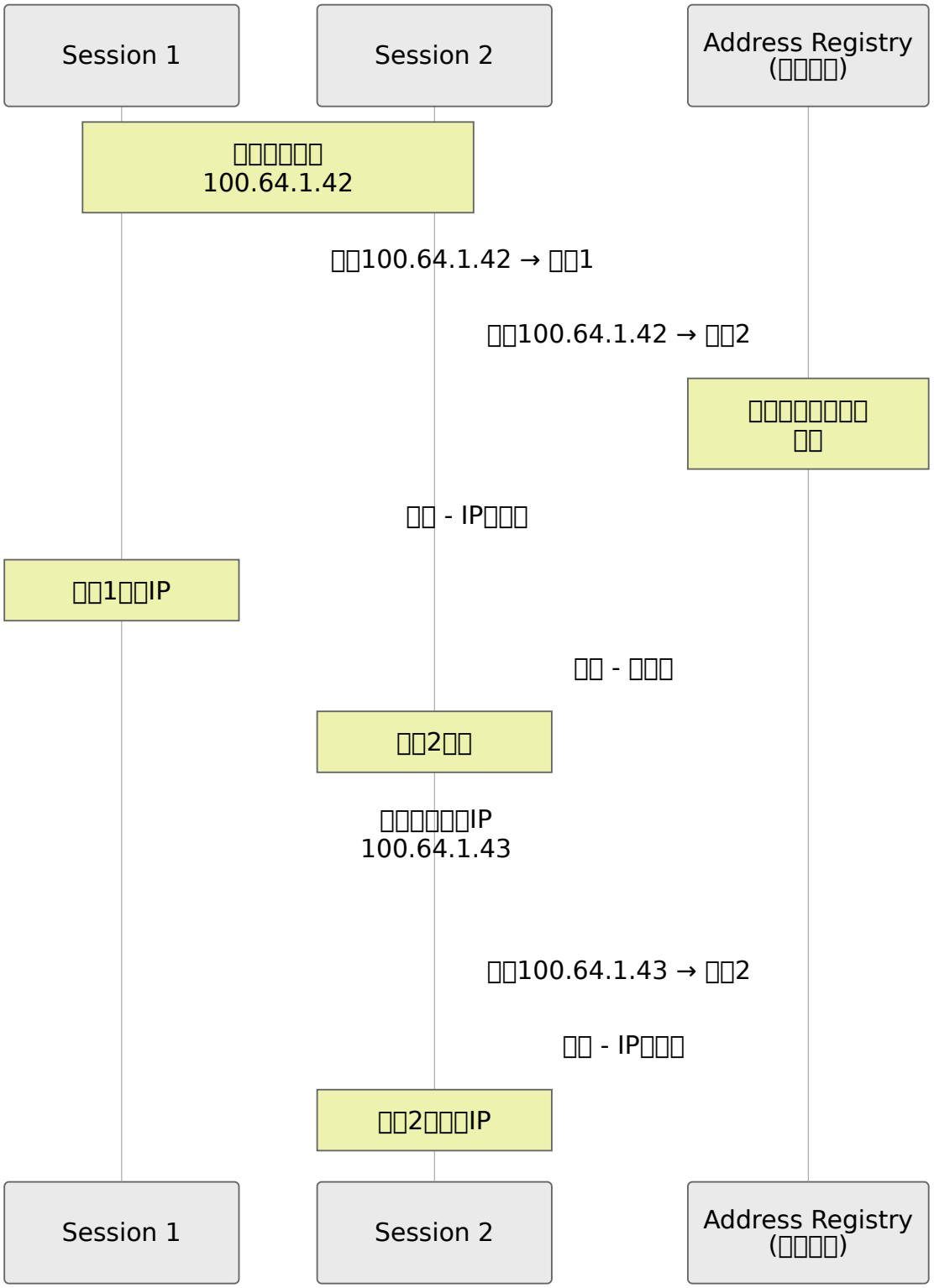
Session 1
Session 2
Address Registry
(□□□□)
□□□□□□□□
100.64.1.42
□□100.64.1.42 → □□1
□□100.64.1.42 → □□2
□□□□□□□□□□□
□□
□□ - IP□□□
□□1□□IP
□□ - □□□
□□2□□
□□□□□□□IP
100.64.1.43
□□100.64.1.43 → □□2
□□ - IP□□□
□□2□□□IP
Session 1
Session 2
Address Registry
(□□□□)

□□□□□□□□□□□

- □□□□□□□□□□□□□□□□□□□□□□□□
- □□□□□□□□□□□□
- □□□□□□□□□IP□□
- □□□□□□□□IP□□□

- □□□□□□□□□□□□□□□□□□IP

□□□□□□

□□□ UE□□□□□APN

□□□□□

```
# □□
subnet_map: %{
  "internet" => ["100.64.1.0/24"],
  default: ["42.42.42.0/24"]
}
```

□□□

- UE□□APN: "unknown.apn"
- □□□subnet_map□□□"unknown.apn"
- □□□□□□□□□□□□□
- □42.42.42.0/24□□IP

□□□□□

1. □□□□□□□□□□□APN□□□
2. □□□□□□□□□□`default`□
3. □□□□□□□□□□□□□□□□

□□□□□□□□□

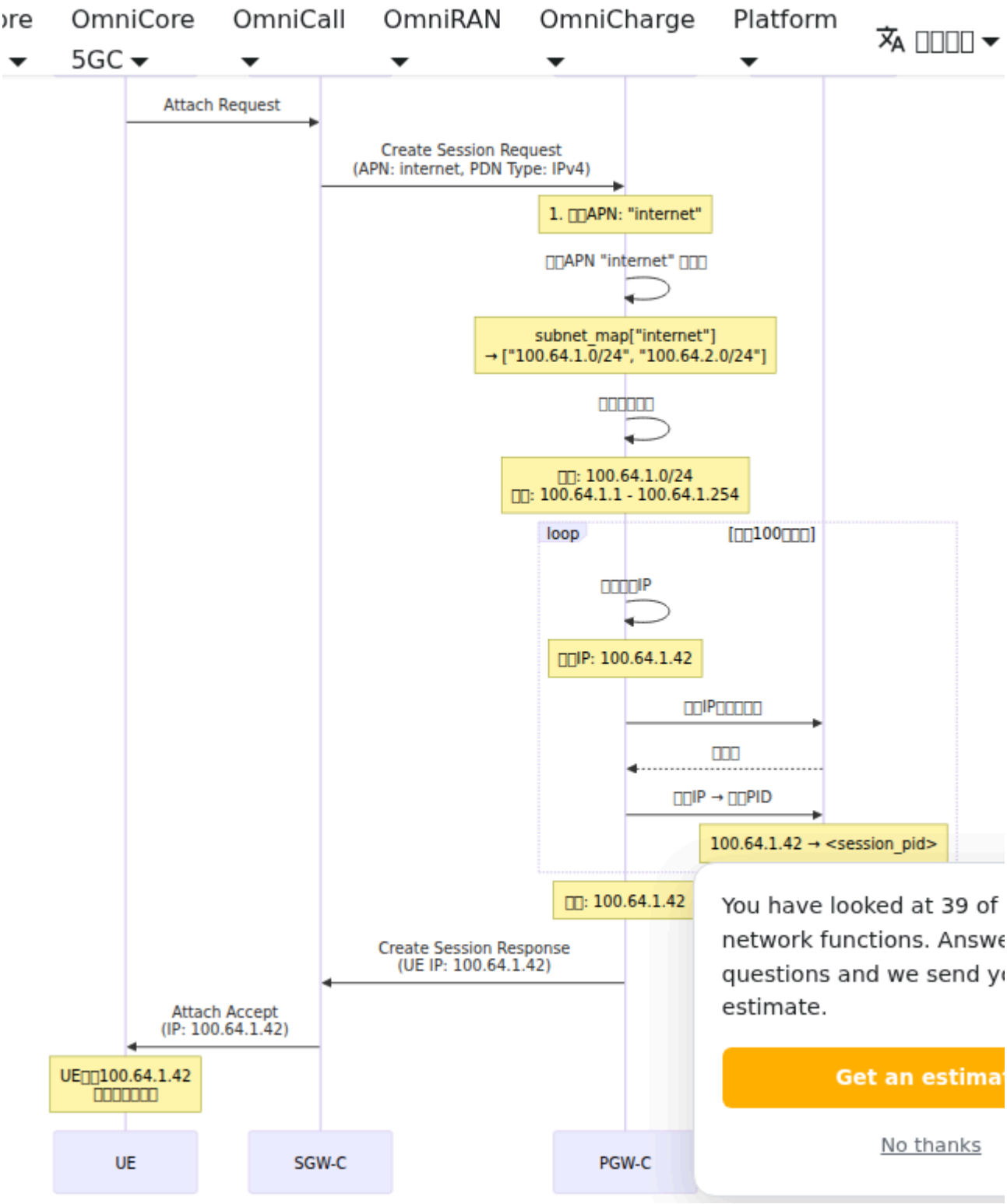
ore
OmniCore 5GC
OmniCall
OmniRAN
OmniCharge
Platform
□□□□
Attach Request
Create Session Request
(APN: internet, PDN Type: IPv4)
1. □□APN: "internet"
□□APN "internet" □□□
subnet_map["internet"]
→ ["100.64.1.0/24", "100.64.2.0/24"]
□□□□□□□
□□: 100.64.1.0/24
□□: 100.64.1.1 - 100.64.1.254
loop
[□□100□□□]
□□□□IP
□□IP: 100.64.1.42
□□IP□□□□□□
□□□
□□IP → □□PID
100.64.1.42 → <session_pid>
□□: 100.64.1.42
Create Session Response
(UE IP: 100.64.1.42)
Attach Accept
(IP: 100.64.1.42)
UE□□100.64.1.42
□□□□□□□□
UE
SGW-C
PGW-C
You have looked at 39 of
network functions. Answe
questions and we send y
estimate.
Get an estima
No thanks

□□□□□

- □□□□□□□□□□□□□□□□□□□□
- IP□□□□□□□□□
- □□□□□□□

□□□□

□□□

□□□ □□□□□□IP□□□□□

```
□: 100.64.1.0/24 (254□□□IP)
□□□: 254□IP
□□□□□ → □□
```

□□□□□□□

1. PGW-C□□100□□□□□
2. □□□□□□IP□□□
3. □□: `{:error, :ue_ip_address_allocation_failed}`
4. □□□□□□
5. SGW-C□□□□□□

□□□□□

```
# □□□□□□
address_registry_count / total_pool_size > 0.8  # □80%□□□

# □□□□□□□□□
"internet" => [
  "100.64.1.0/24",
  "100.64.2.0/24",  # □□□□□□
  "100.64.3.0/24"
]
```

□□IP□□

□□□ □□□□□□□□□IP

GTP-C□□□□□

```
□□□□□□□
├── IMSI: 310260123456789
├── APN: enterprise.corp
├── PDN□□□□□IE□
│   └── PDN□□: IPv4
│   └── IPv4□□: 10.100.0.50  ← UE□□□□IP
```

OmniPGW□□□

1. □□□□□**IP**□ □□□□□□□PDN□□□□IE
2. □□**IP**□ □□□□□□IP□□□□APN□□□□□
3. □□□□□□□ □□IP□□□□□□□□□□□
4. □□□□□□□
   - □□□□□□□□□□IP□□□□□□□
   - □□□□□□□□□□□□□□□□□□□□□□

□□□□□□□

- □□□ UE□□□□□□□□□IP□□
- □□□**IP**□□□□□ □□□□□□ - IP□□□
- □□□**IP**□□□□□□ □□□□□□ - IP□□□□□□□

IPv6□□□□

UE□□IPv6□

```
□□□□□□□
├── PDN□□: IPv6
```

PGW-C□□/64□□□

```
□□□□□: 2001:db8:1:a::/64

UE□□□□□
- 2001:db8:1:a::1
- 2001:db8:1:a::2
- ...□18□□□□□□□
```

□□□

- UE□□□□□□IP□□□□□□□□□
- □□SLAAC□□□□□□□□□□□□
- □□NAT□□

□□□□

UE□□IPv4v6□

```
□□□□□□□
├── PDN□□: IPv4v6
```

PGW-C□□□□□

```
IPv4: 100.64.1.42
IPv6: 2001:db8:1:a::/64
```

□□□□□

- IPv4□□□□IPv4□□
- IPv6□□□□IPv6□□
- □□□□□□
- □□□GTP□□□□□□□□

□APN□□IPv6□□□

□□□□IPv4v6 PDN□□□□□APN□□IPv4 CIDR□□□IPv6□□□□IPv6□□□□□`{:error, :no_ipv6_pool}`□□□□□□□□□□□□□□□□APN□□□□□

APN□□	□□
□□□**SOS**□ APN □□□□□ `"sos"` □	□□□□**IPv4** — □□IPv4□□□□□IPv6□□□□□□□□□PDN□□□□□IPv4□ PAA□PFCP□Gx□□□IPv4□□□□□□□P-CSCF□□PCO□□□□□□□□□□□IMS □□□TS 29.274 / TS 23.401□□□□□ / PDN□□□□□□
□□ APN	□□ — □□□□□□□□□□□□□□□□□□□□□□□□□□□□□□□□□□□□

□□□IPv6□□APN□□□IPv6□□□□□□□□□□□□□APN□□IPv6□□□IPv4v6□□□□□□□□□□□□

□□□□□IP□□

□□IP□□RFC 1918□□

```
# □□□□□□□□□□□□
subnet_map: %{
  "internet" => [
    "10.0.0.0/8",
    "172.16.0.0/12",
    "192.168.0.0/16"
  ]
}
```

□□□PGW-U□□□NAT□□□□□□

□□IP□□

```
# □□□□□□□IP□□□□□□
subnet_map: %{
  "internet" => [
    "203.0.113.0/24"  # □□IP□
  ]
}
```

□□NAT - □□□□□□□

□□□

- □□□□**IP**□**RFC 6598**□□`100.64.0.0/10`□□□□□□NAT□
- □□□□□□□□□□□□IP

□□

IP□□□

IP□□□□□□□□□□□□OAM REST API□□□□□HTTPS/TLS□□□`8443`□□□□`/api`□□□□□ □□□□□□□Swagger UI□□□`https://<omnipgw-ip>:8443/api/docs`□□□

```
GET /api/ip_pools            # □□□ + □□□
GET /api/ip_pools/<name>     # □□□□□□□□□
```

□□□

```
curl -k https://<omnipgw-ip>:8443/api/ip_pools
curl -k https://<omnipgw-ip>:8443/api/ip_pools/Internet
```

□□□□□□□□□□□□

□□	□□
□□	□/APN□□□□□□□“default”□“ims.something.else”□“Internet”□
□□	□□□IP□□
□□	□□□□□□IP
□□	□□□□□□□IP
□□□%	□□□□□□□□□□

□□□

- □□□□□□□□□□□□□□
- □□□□□□□□□□
- □□□□□□
- □APN□□□□□□□

□□□□

□□□□□□□□□□

```
# □□□□□□□□IP
address_registry_count

# □□□□□□□□□□□□□
address_registry_count / <total_pool_size> * 100
```

□□□

```
□: 100.64.1.0/24 (254□IP)
□□□: 150□IP
□□□: 150 / 254 = 59%
```

□□

```
# □□□□□□□□□□
- alert: UEIPPoolUtilizationHigh
  expr: address_registry_count > 200  # □□/24□
  for: 10m
  annotations:
    summary: "UE IP□□□□□□80%"
    description: "□□: {{ $value }} / 254□IP□□□"

# □□□□□□□□
- alert: UEIPPoolExhausted
  expr: address_registry_count >= 254  # □□/24□
  for: 1m
  annotations:
    summary: "UE IP□□□ - □□□□IP"

# □□□□□□□□□
- alert: UEIPAllocationFailures
  expr: rate(ue_ip_allocation_failures_total[5m]) > 0
  for: 5m
  annotations:
    summary: "UE IP□□□□□□"
```

Grafana□□□

□□1□IP□□□□

```
# □□□□□□□□□
(address_registry_count / 254) * 100
```

□□2□□□□□□□□□□□IP

```
# □□□□
address_registry_count
```

□□3□□□□

```
# □□□□□□□
rate(address_registry_count[5m])
```

□□**4**□□□□□□

```
# □□□□□□□□□□□□□□□□□□
(254 - address_registry_count) / rate(address_registry_count[1h])
```

□□□□

□□**1**□□□□□□□□□□□□□□□**IP**□

□□□

- □□□□□□□□□□“□□□□□”
- □□□“UE IP□□□□□□”

□□□□□□

1. □□□

   ```
   # □□□□□□□
   curl http://<pgw_c_ip>:42069/metrics | grep
   address_registry_count
   ```

2. □□□□

```
# □□□□□□□
config :pgw_c,
  ue: %{
    subnet_map: %{
      "internet" => [
        "100.64.1.0/24"  # □□□□□□CIDR
      ]
    }
  }
```

3. **APN□□□□**

```
# □□□□□□APN□□□□□□□□□
# □□□□□□□□□
subnet_map: %{
  default: ["42.42.42.0/24"]
}
```

□□□□□□

- □□□□ □□□□□□□
- □□□□□□□□ □□PGW-C□□□□□□□IP
- □□□□□□ □□`runtime.exs`□□□□□□□

□□2□IP□□□□

□□□

- □□UE□□□□□□□IP□□□□□□□
- □□□□

□□□

- □□□□□□□□□□□□□□□□□□

□□□

```
# □□□□□□□□□IP
grep "already_registered" /var/log/pgw_c.log
```

□□□□□

- □□□□□□□□□□□□□□□□□□
- □□□□□□□□□□□□

□□3□□□□□□IP□

□□□

- UE□□□□□□□□IP
- APN "internet"□"ims"□□□IP

□□□

- □□□□subnet_map□□

□□□

```
# □□□□□APN□□□□□
subnet_map: %{
  "internet" => [...],    # □□□□□
  "Internet" => [...]     # □□□APN□
}
```

□□□□□

- □□APN□□□□□□□□□□□□□□
- □□□□□□□□□□□□□□□□

□□4□IPv6□□□□

□□□

- UE□□IPv6□□□□□

- UE□□**IPv4v6** PDN□□APN□□IPv6□□□□□□ □□□**IPv4**□□□SOS APN□□□□□□□ □□□ APN□

□□□□□□□□□

1. □□□**IPv6**□

```
# □□IPv6□□
subnet_map: %{
  "internet" => [
    "100.64.1.0/24"  # □IPv4
  ]
}
```

2. □□□**IPv6**□□

```
# □□□□□□□□/48□□□□
"internet" => [
  "2001:db8::/128"  # □□ - □□□□□□
]
```

□□**IPv6**□□**IPv4v6**□□□□□□□□□□

□**IPv4v6**□□□□□□IPv6□□□APN□□`register_new_ipv6/1` □□`{:error, :no_ipv6_pool}`□□□□□□□□□□□□□□

- □□□**SOS**□**APN**□□□□□`"sos"`□□□□□□**IPv4** — □□IPv4□□□□□IPv6□□□□□□□PDN□□□□ □IPv4□□□□□□P-CSCF□PCO□□□□□□□
- □□**APN**□□□□□□`{:error, :no_ipv6_pool}` — □□□□□□□□□□□□□□□

□□□APN□□IPv6□□□IPv4v6□□□

□□□□□

```
# □□IPv6□□□□□□□□□□□□□□APN□
subnet_map: %{
  "internet" => [
    "100.64.1.0/24",
    "2001:db8:1::/48"  # IPv6□
  ]
}
```

□□□IPv4□□□□□□□SOS□APN□IPv4-only□□□□□□ — □□SOS PDN□□□□□□□IPv6 CIDR□

□□5□□□□□□

□���□

- □□□□□
- `address_registry_count`□□□□□

□□□□□

1. □□□□□

   ```
   "internet" => [
     "100.64.1.0/24",   # □□
     "100.64.2.0/24",   # □□□□□□254□IP□
     "100.64.3.0/24"    # □□□□□□254□IP□
   ]
   ```

2. □□□□□□□□□

   ```
   # □/24□□□/22
   "internet" => [
     "100.64.0.0/22"  # 1022□□□IP
   ]
   ```

3. □□□□□

   - □□□□□□
   - □□□□□□□□□□□□□□

□□□□

□□□□

□□□□□□□□□□

```
□□□□□□□□□10,000
□□□□□□30%□3,000□□□□□□□
□□□□□□50%
□□IP□3,000 * 1.5 = 4,500□IP

□□□□/20□4,094□□□IP□ - □□
□□□□/19□8,190□□□IP□ - □□
```

□□□□

□□□

- □□`100.64.0.0/10`□RFC 6598 - □□□□NAT□
- □□400□□IP
- □□□□□□□□□NAT

□□□

- □□IP□□□□□□□□
- □□□VPN□□□□□□□□□□

□□□□

```
config :pgw_c,
  ue: %{
    subnet_map: %{
      # □□□□□APN - □□
      "internet" => [
        "100.64.0.0/18"  # 16,382□IP
      ],

      # IMS - □□□□□□
      "ims" => [
        "100.64.64.0/22"  # 1,022□IP
      ],

      # □□ - □□□
      "enterprise.corp" => [
        "100.64.68.0/22"  # 1,022□IP
      ],

      # IoT - □□□□□□□□□
      "iot.m2m" => [
        "100.64.72.0/20"  # 4,094□IP
      ],

      # □□ - □□□
      default: [
        "100.64.127.0/24"  # 254□IP
      ]
    }
  }
```

□□□□

□□

- **□□□□** - UE IP□□□□APN□□□□
- **PCO□□** - □IP□□□□□□□DNS□P-CSCF□MTU

- **□□□□** - □□□□□□□□PDN□□□□□□IP□□
- **PFCP□□** - □□PFCP□UPF□UE□□□□

□□□□

- **S5/S8□□** - □□GTP-C□□IP□□
- **Diameter Gx□□** - IP□□□□□□□□

□□

- **□□□□** - IP□□□□□□□□□□□□□
- **□□CDR□□** - □□□□□□□□CDR□□UE IP□□

□□□□□□□